WHM 100 DS

Wall vent for natural supply ventilation

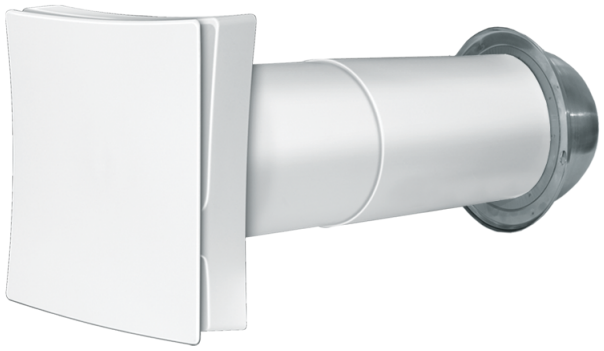

	Unit of measurement	WHM 100 DS

Dimensions

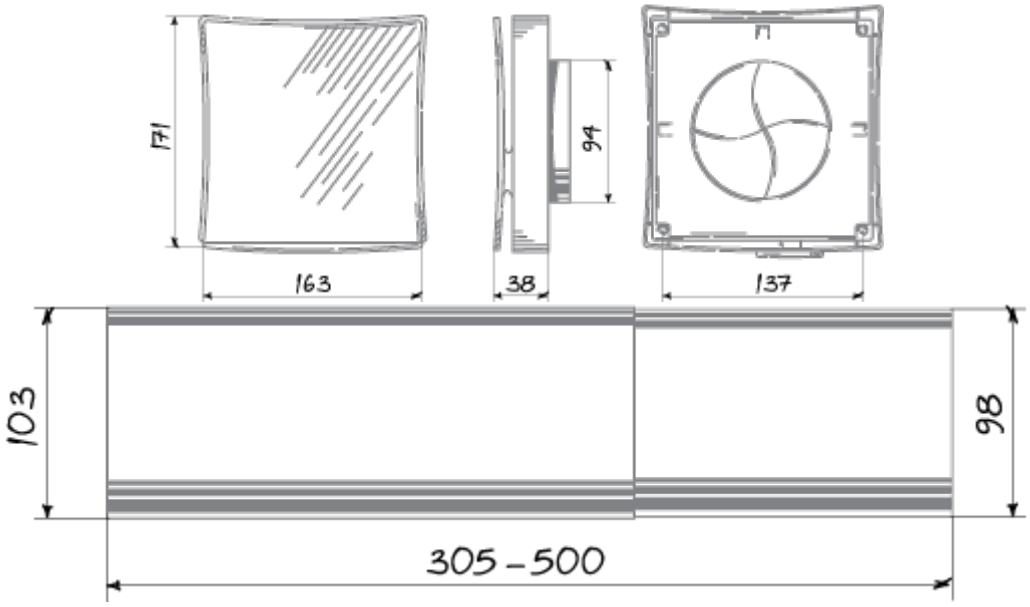

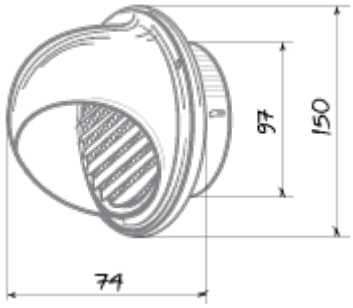

Accessories

Other accessories

Name	Photo	Description
FP 143x143x10 G3	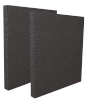	G3 panel filter