

VRVS 160

Backdraft air dampers for round ducts

- Casing material: Galvanized steel

	Unit of measurement	VRVS 160
Connected air duct size	mm	160
Weight	kg	1.06

Dimensions

ØD	B	L
159	204	190

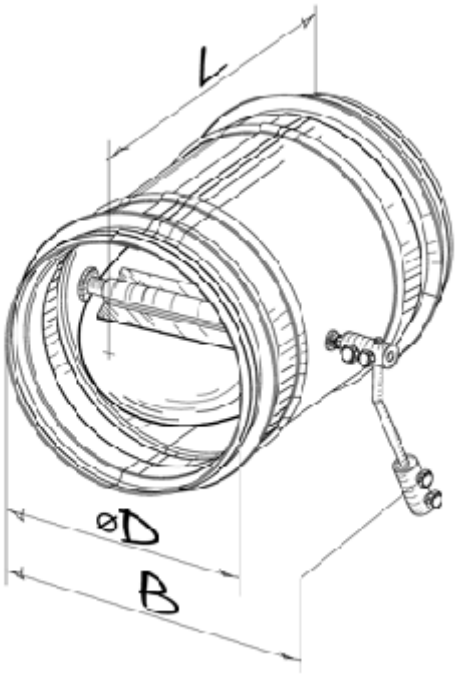
L
øD
B