

VMBR 200

Metal air disc valves for supply ventilation, air conditioning and heating

- Casing material: Coated steel

	Unit of measurement	VMBR 200
Connected air duct size	mm	200

Dimensions

ØD	ØD1	ØD2	ØD3	H1
199	225	200	249	70

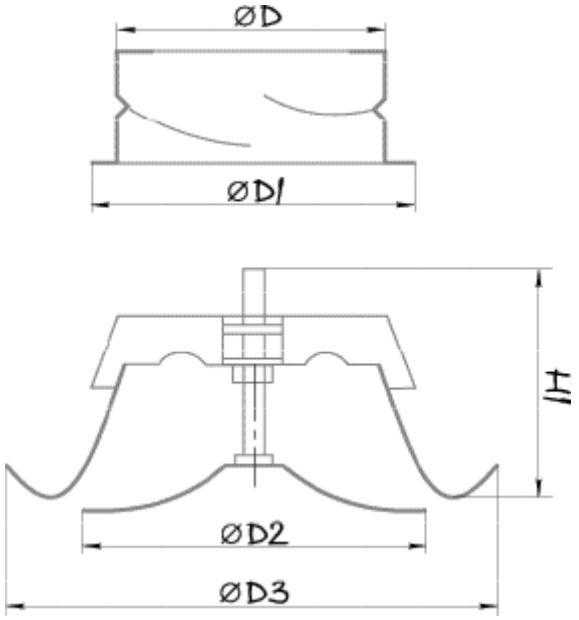
ØD
ØD1
H1
ØD2
ØD3