

VMBR 100

Metal air disc valves for supply ventilation, air conditioning and heating

- Casing material: Coated steel

	Unit of measurement	VMBR 100
Connected air duct size	mm	100

Dimensions

ØD	ØD1	ØD2	ØD3	H1
99	123	75	128	60

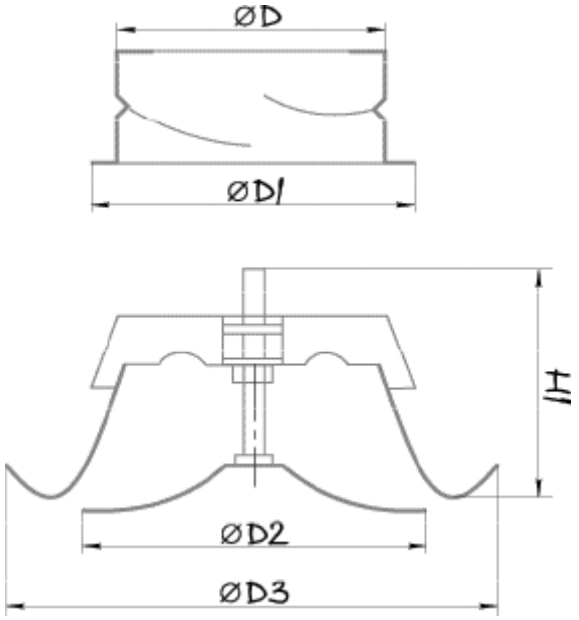
ØD
ØD1
H1
ØD2
ØD3