

Vento Eco Comfort L

Heat recovery single-room units. Maximum air flow up to 50 m³/h

- Air flow in heat recovery mode: 25
- Sound pressure level LpA at 3 m: 26
- Sound pressure level LpA at 1 m: 35
- Heat exchanger type: Regenerative
- Heat exchanger material: Ceramic
- Casing material: Plastic

	Unit of measurement	Vento Eco Comfort L		
Maximum supply voltage	V	240		
Minimum supply voltage	V	100		
Power supply frequency	Hz	50/60		
Rated power	W	2.00	3.5	5.5
Unit current	A	0.030	0.034	0.060
Air flow in ventilation mode	m³/h	15	35	50
Air flow in heat recovery mode	m³/h	8	15	25
Sound pressure level LpA at 3 m	dB(A)	4	19	26
Sound pressure level LpA at 1 m	dB(A)	10	27	35
Heat recovery efficiency, max	%	95		
Heat exchanger type	-	Regenerative		
Heat exchanger material	-	Ceramic		
Transported air temperature (max)	°C	40		
Transported air temperature (min)	°C	-20		
Ingress protection rating	-	IP24		
Minimum wall thickness	mm	330		
Maximum wall thickness	mm	690		

Dimensions

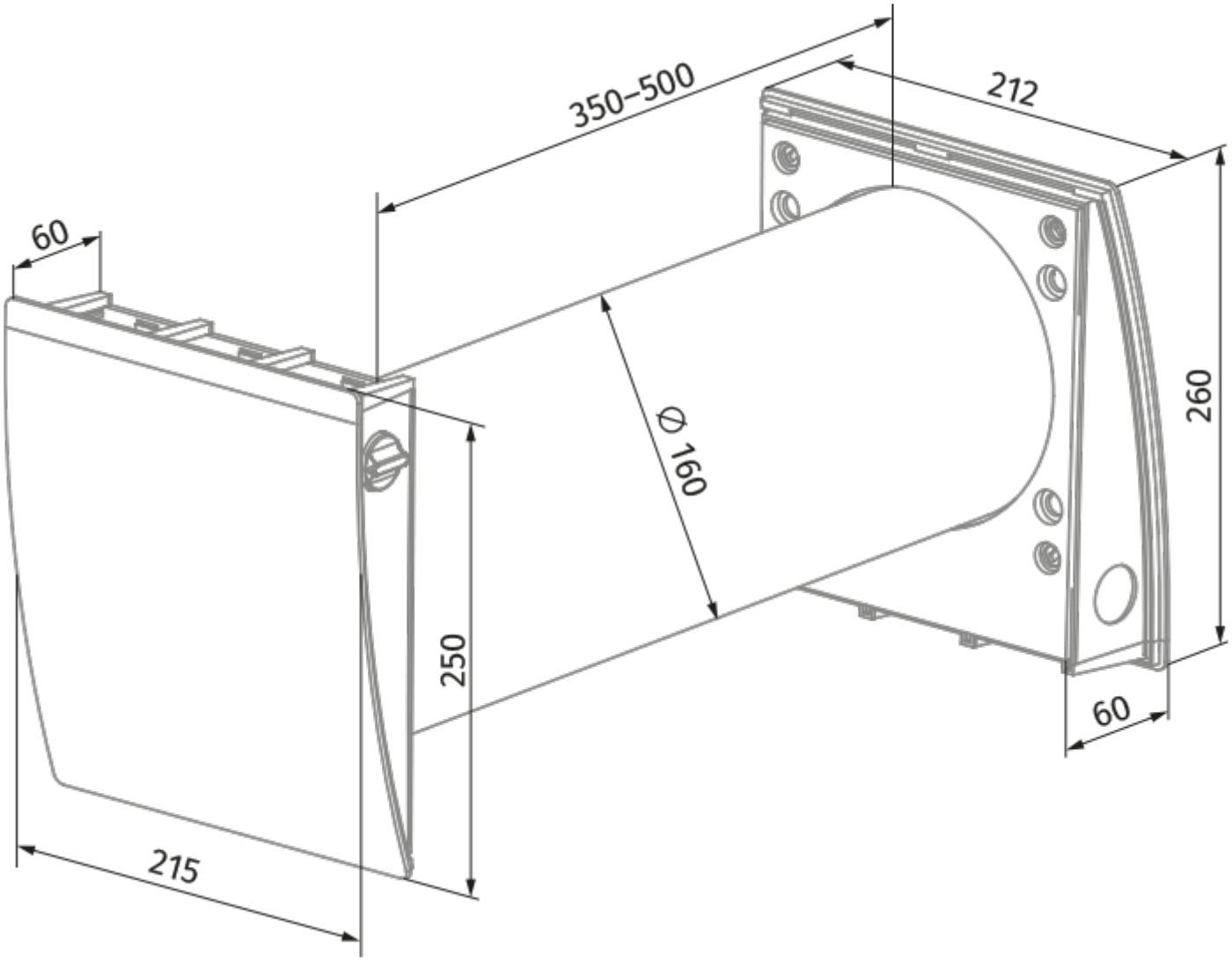

Accessories

Hoods

Name	Photo	Description
AH-10 beige 160		Plastic hoods decoration of supply and exhaust vents of public, residential and industrial ventilation systems
AH-10 black 160		Plastic hoods decoration of supply and exhaust vents of public, residential and industrial ventilation systems
AH-10 brown 160		Plastic hoods decoration of supply and exhaust vents of public, residential and industrial ventilation systems

AH-10 chrome 160		Plastic hoods decoration of supply and exhaust vents of public, residential and industrial ventilation systems
AH-10 grey 160		Plastic hoods decoration of supply and exhaust vents of public, residential and industrial ventilation systems
AH-10 terracotta 160		Plastic hoods decoration of supply and exhaust vents of public, residential and industrial ventilation systems
AH-10 white 160		Plastic hoods decoration of supply and exhaust vents of public, residential and industrial ventilation systems
PP 160/0.5		The outer hood is designed to prevent the ingress of water and large objects into the ventilation equipment from outside
AH-8 white 160		Outer ventilation hood with frost protection for a cold climate
AH-8 chrome 160		Outer ventilation hood with frost protection for a cold climate

Other accessories

Name	Photo	Description
FP2 Vento G3		G3 filter kit (2 pcs.)
FP2 Vento G4		Coarse filter G4 Contents: • plastic filter holder (1 pc.) • G4 filter (1 pc.)
FP2 Vento F7		Fine filter F7 Includes: • plastic filter holder (1 pc.) • F7 fine filter (1 pc.). Filtration rate PM2.5 > 70 %