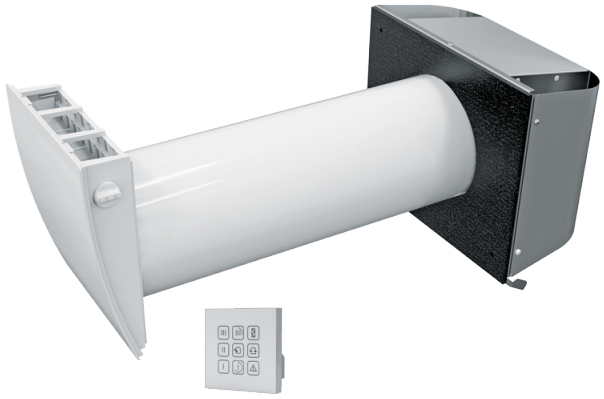

Vento Eco A50 C1 L035 S Pro

Heat recovery single-room units

- Air flow in heat recovery mode: 25
- Sound pressure level LpA at 3 m: 20
- Sound pressure level LpA at 1 m: 29
- Heat exchanger type: Regenerative
- Heat exchanger material: Ceramic
- Enthalpy heat exchanger
- Control: Wired control panel
- Casing material: Plastic

	Unit of measurement	Vento Eco A50 C1 L035 S Pro		
Minimum supply voltage	V	100		
Maximum supply voltage	V	240		
Power supply frequency	Hz	50/60		
Rated power	W	1.00	2.10	4.30
Unit current	A	0.017	0.025	0.041
Air flow in ventilation mode	m³/h	15	30	50
Air flow in heat recovery mode	m³/h	8	15	25
Sound pressure level LpA at 3 m	dB(A)	12	18	20
Sound pressure level LpA at 1 m	dB(A)	21	27	29
Heat recovery efficiency, max	%	88		
Heat exchanger type	-	Regenerative		
Heat exchanger material	-	Ceramic		
Transported air temperature (max)	°C	40		
Transported air temperature (min)	°C	-20		
Ingress protection rating	-	IP24		

Dimensions

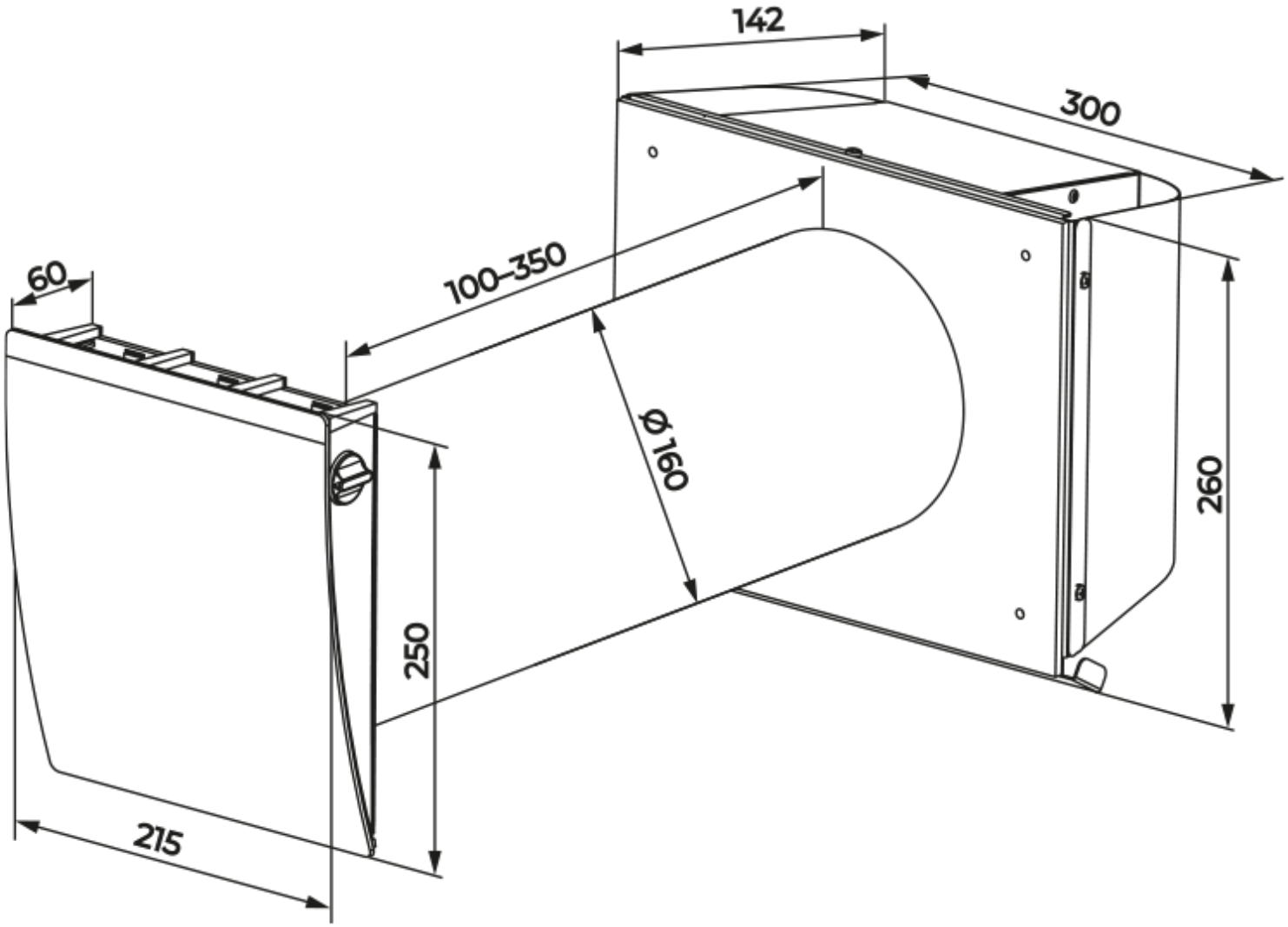
142
300
60
100–350
Ø 160
260
250
215

Ecodesign

Trademark	Blauberg					
Model	Vento Eco A50 C1 L035 S Pro					
Specific energy consumption (SEC) (kWh/(m²/a))	Cold		Average		Warm	
	-75.8	A+	-36.5	A	-14.1	E
Type of ventilation unit	Bidirectional					
Type of drive installed	3-speed					
Type of heat recovery system	Regenerative					
Thermal efficiency of heat recovery (%)	76					
Maximum flow rate (m³/h)	25					
Electric power input (W)	4.3					
Reference flow rate (m³/s)	0.004					
Specific power input (SPI) (W/(m³/h))	0.14					
Control typology	Clock control					
Airflow sensitivity at +20 Pa and -20 Pa (%)	0.26					
Declared typology	RVU BVU					
Sound power level (dB(A))	38					
The annual electricity consumption (AEC) (kWh/a)	Cold		Average		Warm	
	179		179		179	

Accessories

Other accessories

Name	Photo	Description
FP2 Vento G3		G3 filter kit (2 pcs.)

Other accessories

Name	Photo	Description
Completion Kit Vento Eco A50-4		Indoor grille and cartridge with heat regenerator, fan and G3 filters

SE Vento Eco A50 Pro		Sensor control panel