

Ultra 250 Round

Centrifugal exhaust low-noise fans for ceiling mounting

- Sound pressure level LpA at 3 m: 36
- Casing material: Plastic
- Backdraft protection: Backdraft damper

	Unit of measurement	Ultra 250 Round
Connected air duct size	mm	150
Minimum supply voltage	V	220
Maximum supply voltage	V	240
Power supply frequency	Hz	50
Rated power	W	57
Unit current	A	0.25
Maximum airflow	m^3/h	482
Sound pressure level LpA at 3 m	dB(A)	36
Ingress protection rating	-	IPX4
Impeller material	-	Plastic

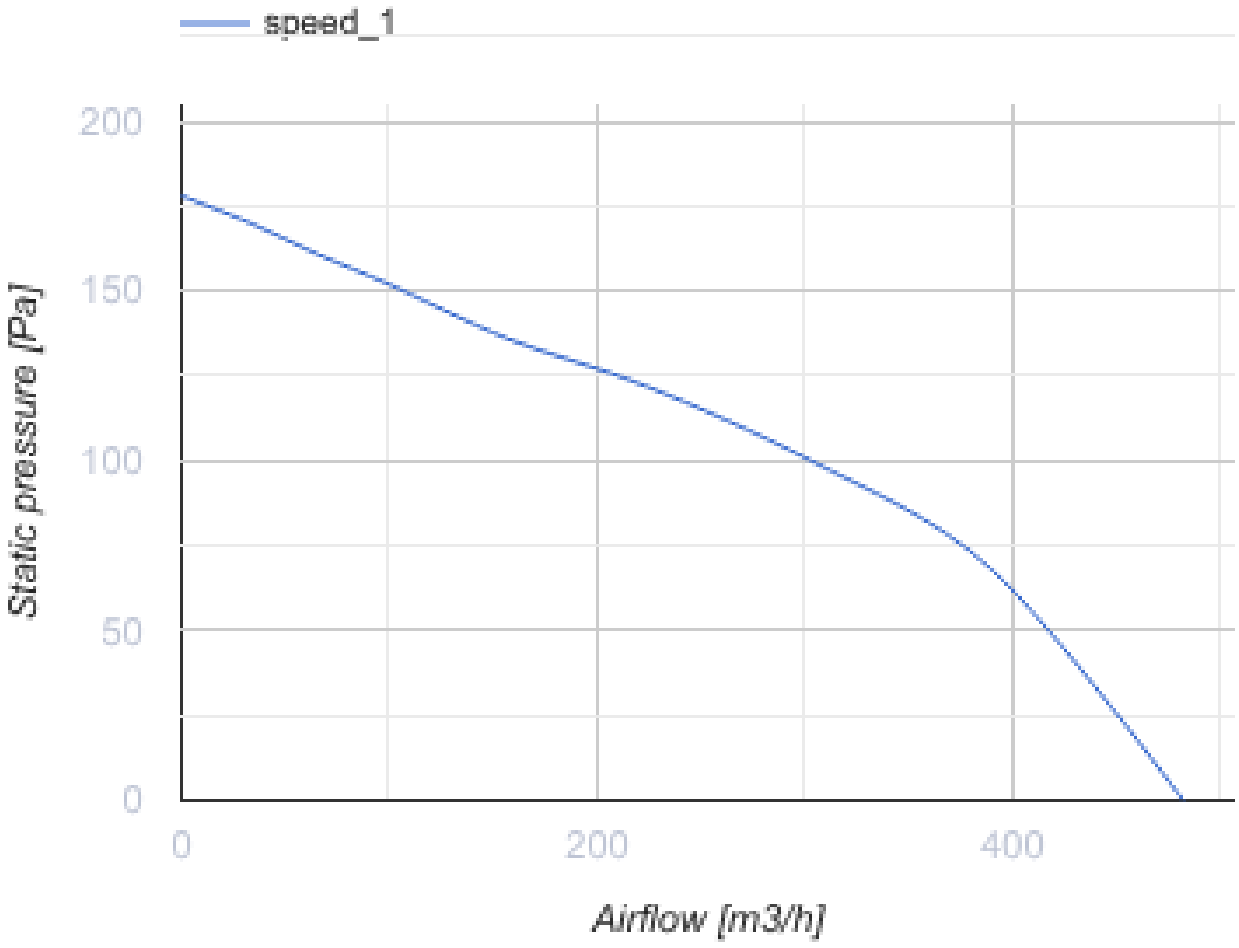

Dimensions

a	b	c	Ø d
198	38	330	148

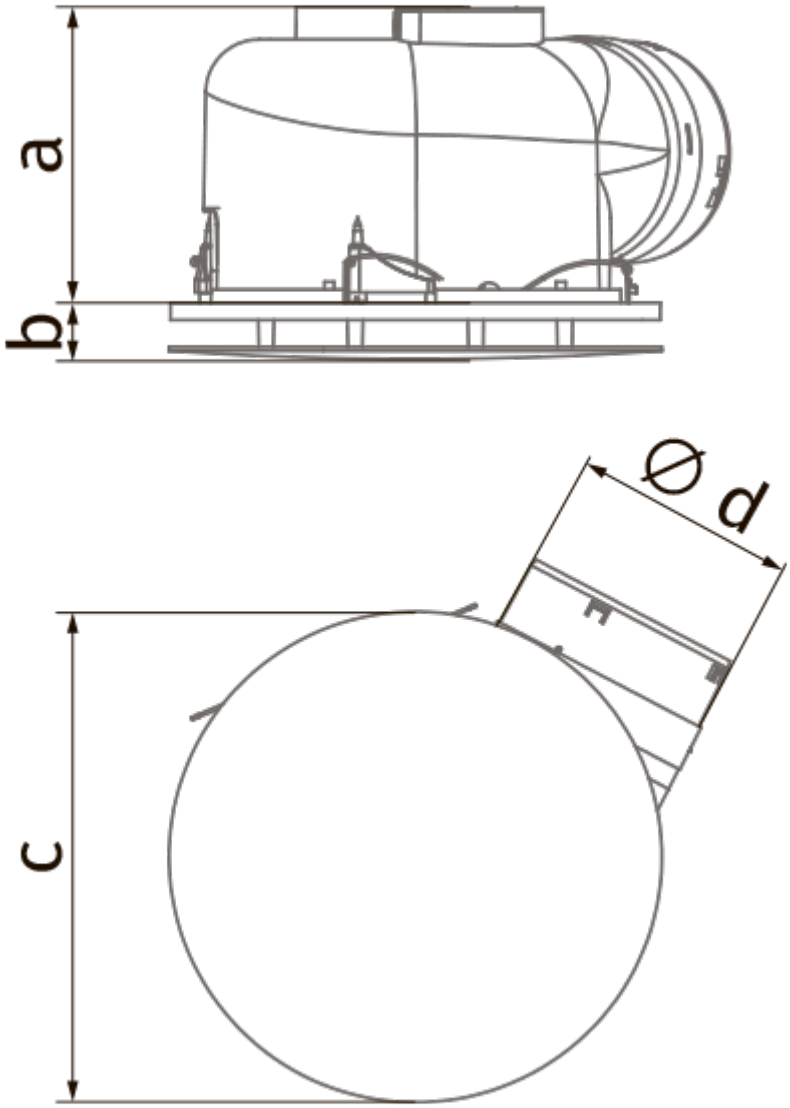

Accessories

Thyristor speed controllers

Name	Photo	Description
CDT E1.8		Thyristor speed controller