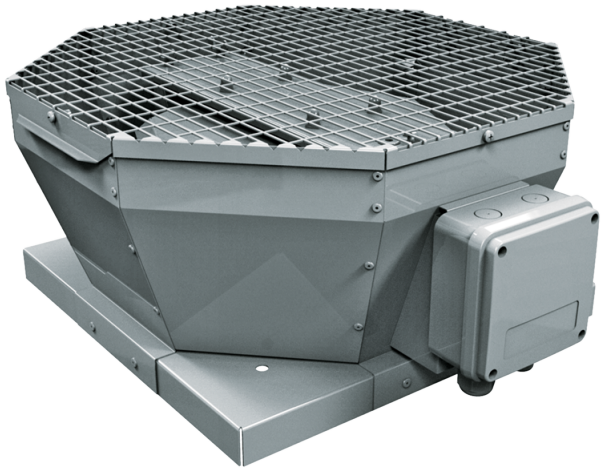

Tower-V EC 355

Roof centrifugal fans with vertical air discharge with EC-motors

• Sound pressure level LpA at 3 m: 51
• Impeller type: Centrifugal impeller with backward curved blades
• Casing material: Coated steel

	Unit of measurement	Tower-V EC 355
Phases	-	1
Minimum supply voltage	V	230
Maximum supply voltage	V	230
Power supply frequency	Hz	50/60
Rated power	W	669
Unit current	A	4.95
Maximum airflow	m³/h	3830
Sound pressure level LpA at 3 m	dB(A)	51
Weight	kg	27
Transported air temperature (max)	°C	50
Transported air temperature (min)	°C	-25
Ingress protection rating	-	IPX4
Ingress protection rating of the drive	-	IP54
Impeller material	-	Aluminium
Size	mm	355

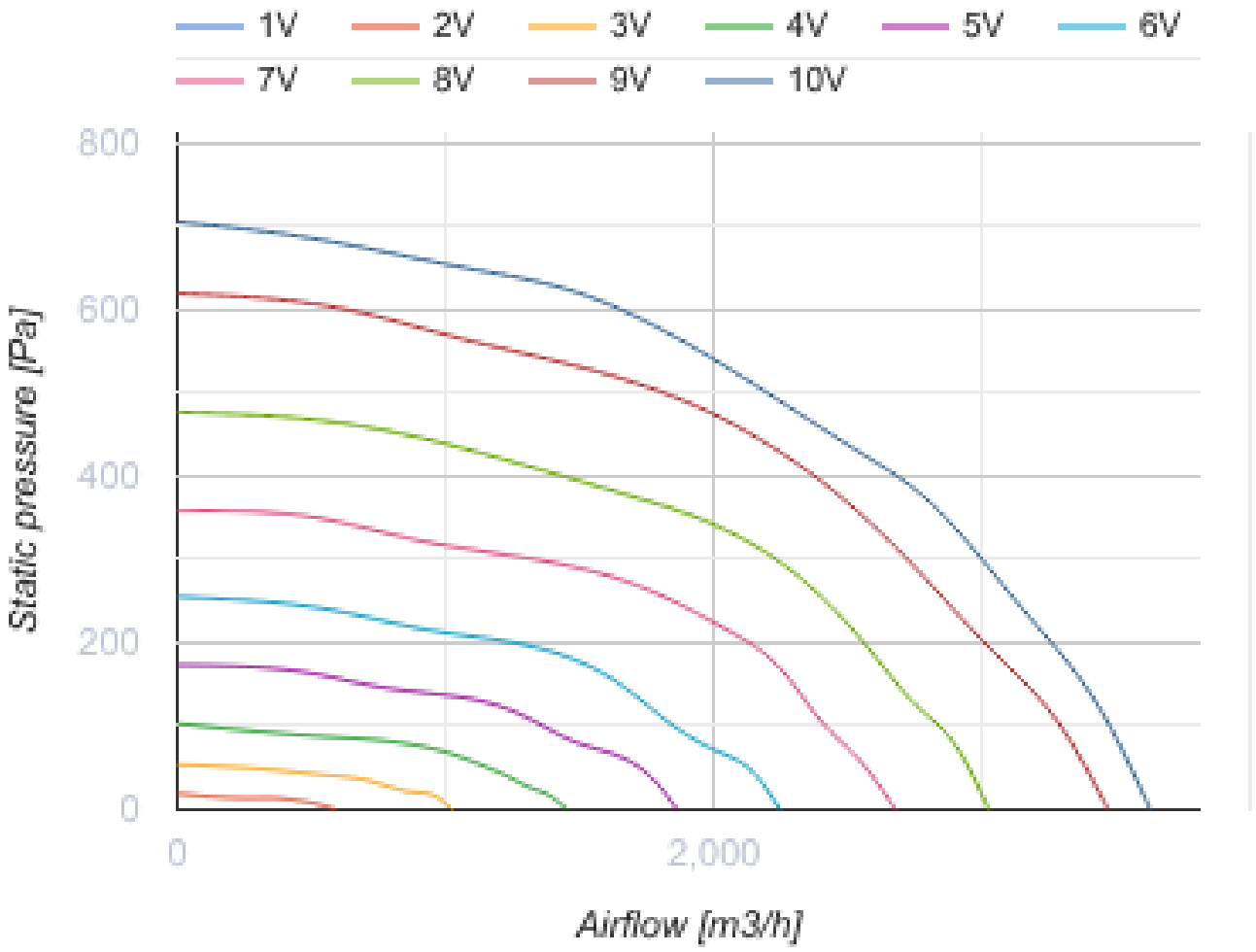
1V
2V
3V
4V
5V
6V
7V
8V
9V
10V
800
600
400
200
0
Static pressure [Pa]
0
2,000
Airflow [m3/h]

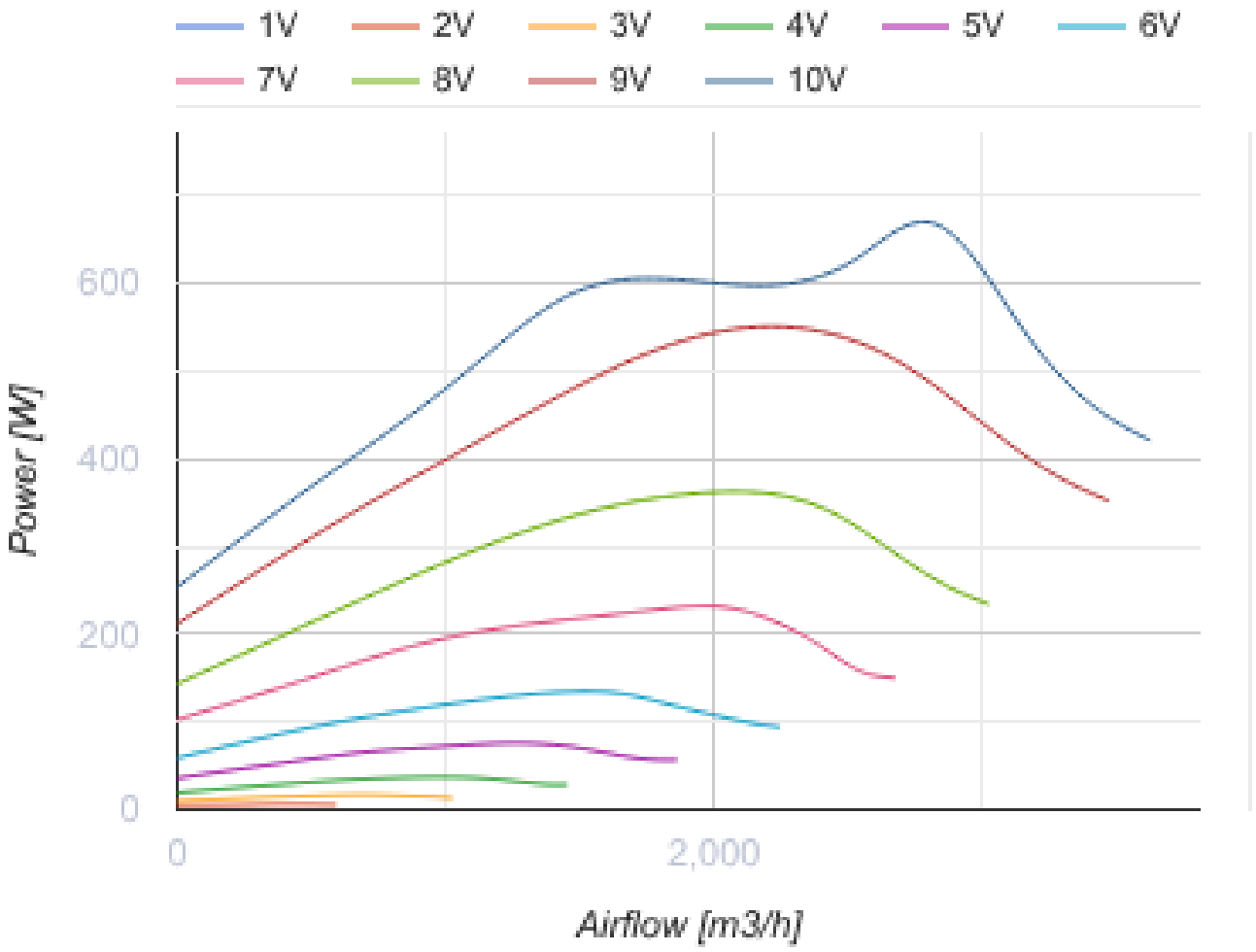

Dimensions

L	L1	H	L2
738	598	326	53

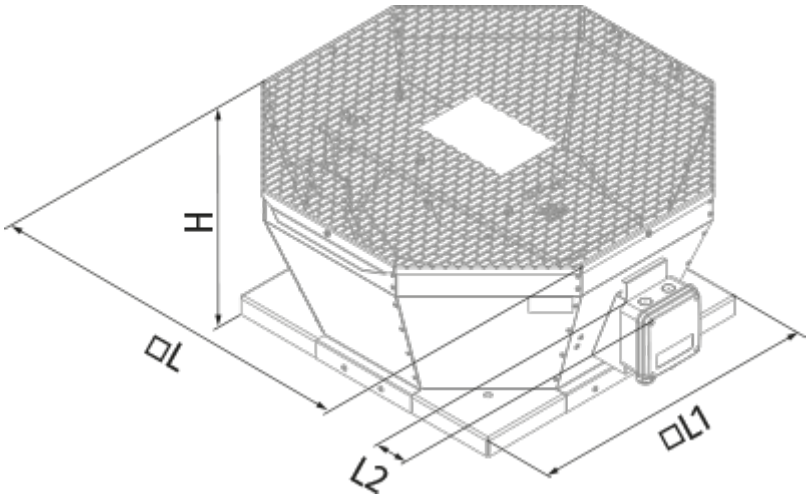
H
ØL
L2
ØL1

Ecodesign

Trademark	Blauberg
Model	Tower-V EC 355
Type of ventilation unit	Unidirectional
Type of drive installed	Integrated VSD
Type of heat recovery system	None
Nominal external pressure (Pa)	534
Maximum external leakage rates (%)	2.7
Static efficiency (%)	57.3
Declared typology	NRVU UVU
Effective electric power input (kW)	0.94
Sound power level (dB(A))	71

Accessories

EC motors regulators

Name	Photo	Description
CDT E/0-10		Speed control for EC motors