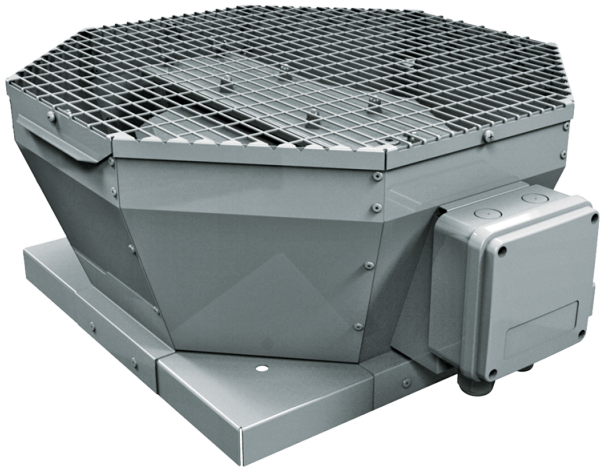

Tower-V 560 4D

Roof centrifugal fans with vertical air discharge

- Sound pressure level LpA at 3 m: 66
- Impeller type: Centrifugal impeller with backward curved blades
- Casing material: Coated steel

	Unit of measurement	Tower-V 560 4D
Phases	-	3
Minimum supply voltage	V	400
Maximum supply voltage	V	400
Power supply frequency	Hz	50
Rated power	W	1970
Unit current	A	3.36
Maximum airflow	m³/h	13560
Sound pressure level LpA at 3 m	dB(A)	66
Weight	kg	63
Transported air temperature (max)	°C	50
Transported air temperature (min)	°C	-25
Ingress protection rating	-	IPX4
Ingress protection rating of the drive	-	IP54
Impeller material	-	Aluminium
Size	mm	560

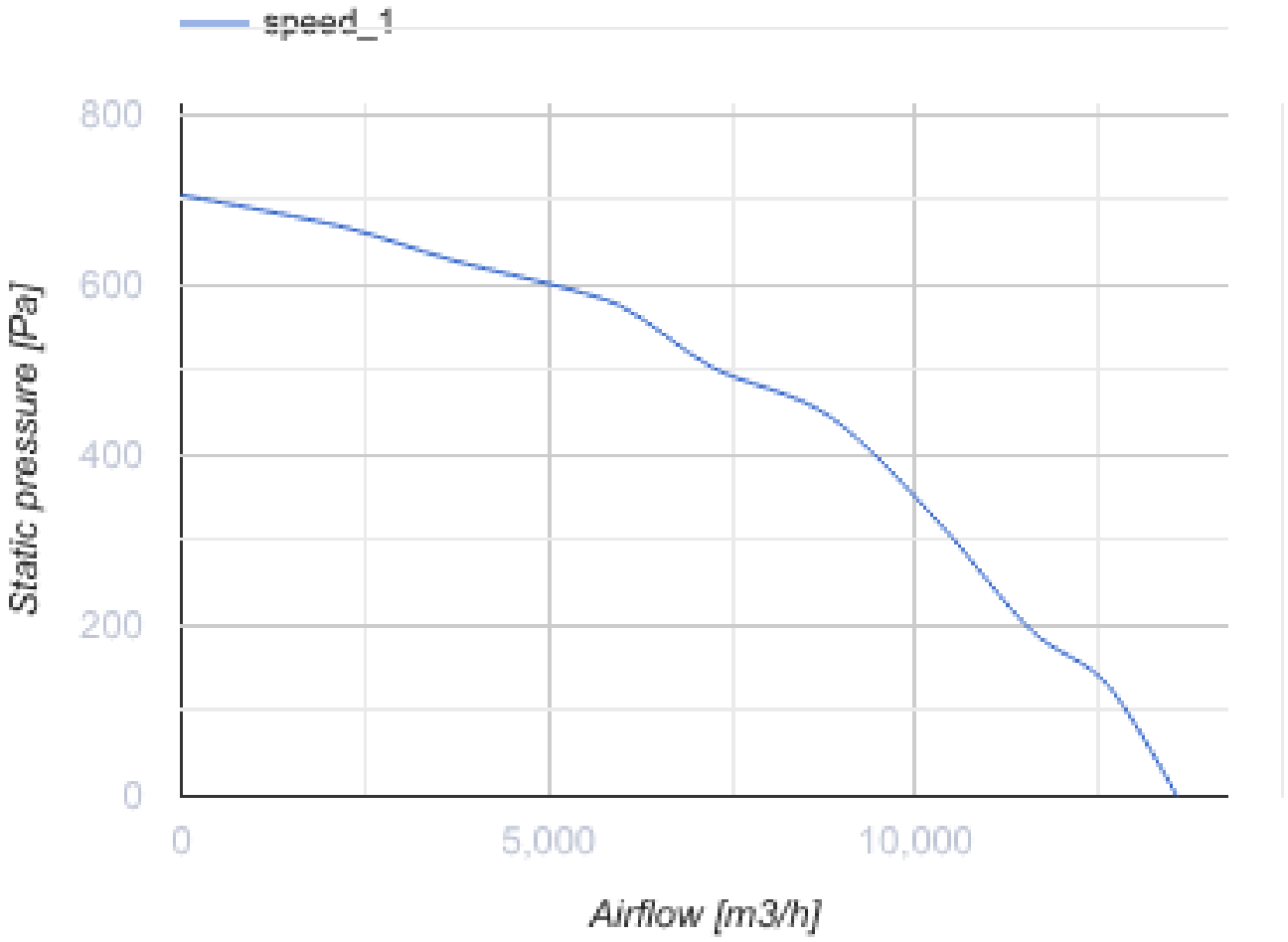
speed_1
800
600
400
200
0
Static pressure [Pa]
0
5,000
10,000
Airflow [m3/h]

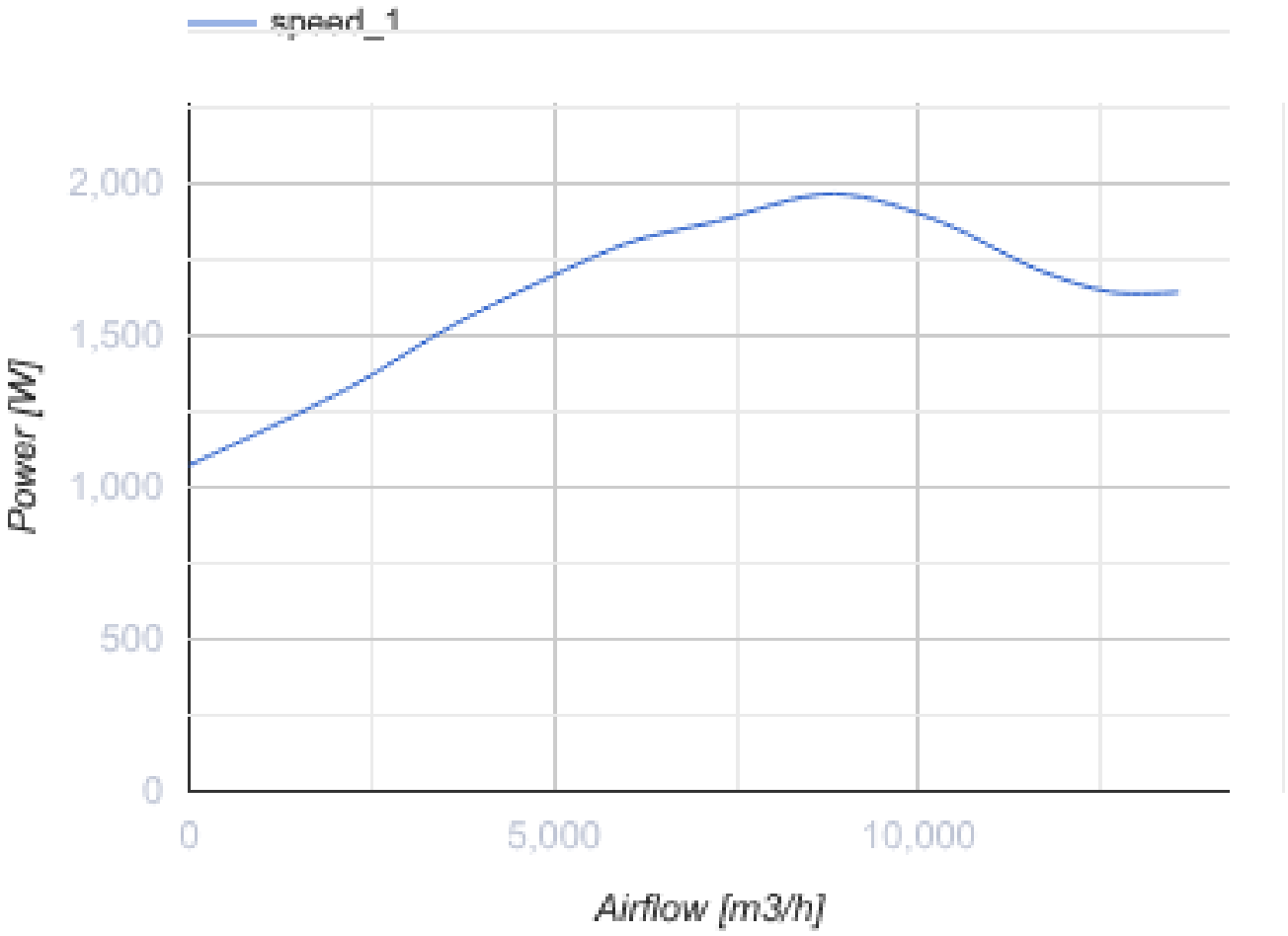

Dimensions

ØD	H	L	L1
605	485	859	833

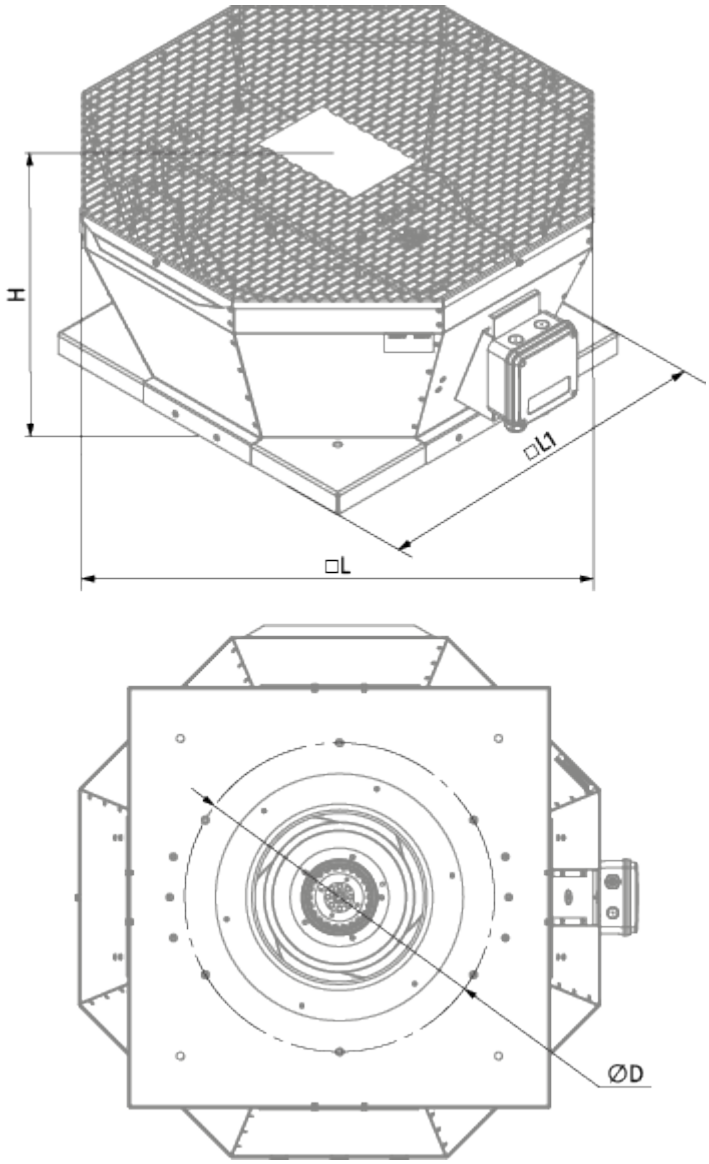
H
□L1
□L
ØD