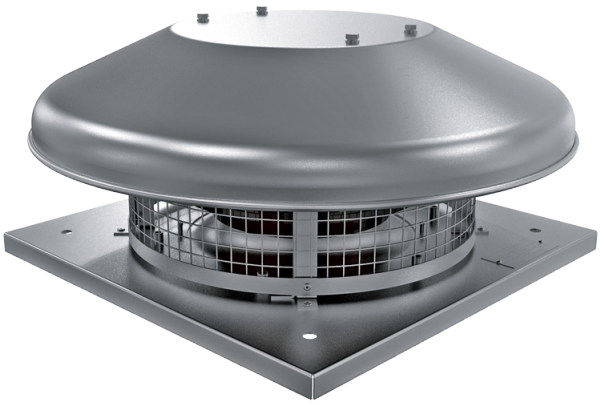

Tower-HC 310 2E A

Roof centrifugal fans

- Sound pressure level LpA at 3 m: 58
- Impeller type: Centrifugal impeller with backward curved blades
- Casing material: Aluminium

	Unit of measurement	Tower-HC 310 2E A
Phases	-	1
Maximum supply voltage	V	230
Minimum supply voltage	V	230
Power supply frequency	Hz	50
Rated power	W	324
Unit current	A	1.42
Maximum airflow	m³/h	2150
Sound pressure level LpA at 3 m	dB(A)	58
Weight	kg	10
Transported air temperature (max)	°C	50
Transported air temperature (min)	°C	-25
Ingress protection rating	-	IPX4
Ingress protection rating of the drive	-	IP44
Size	mm	310

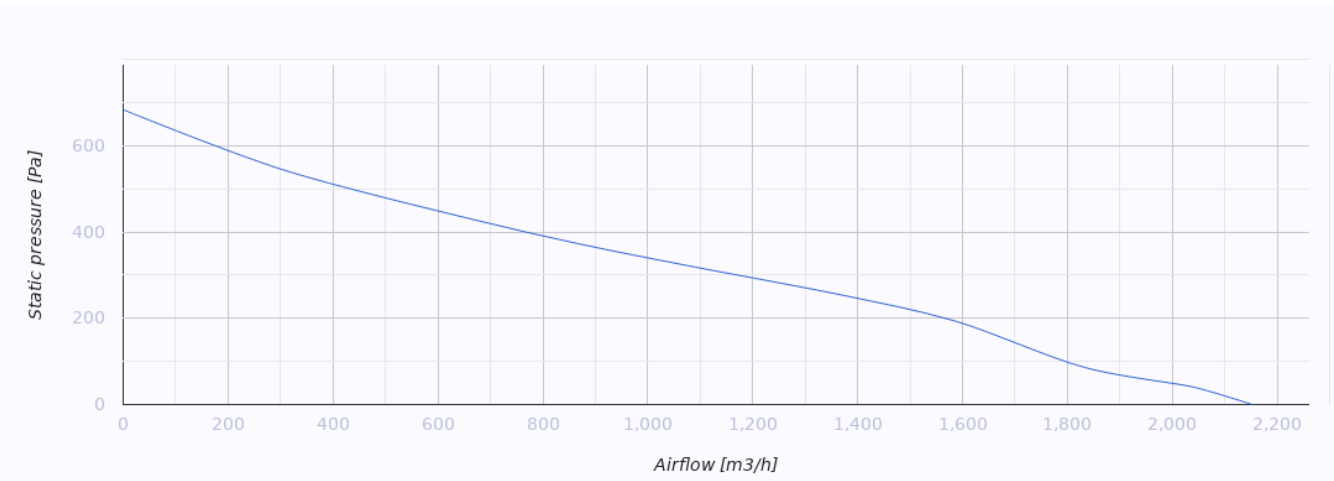

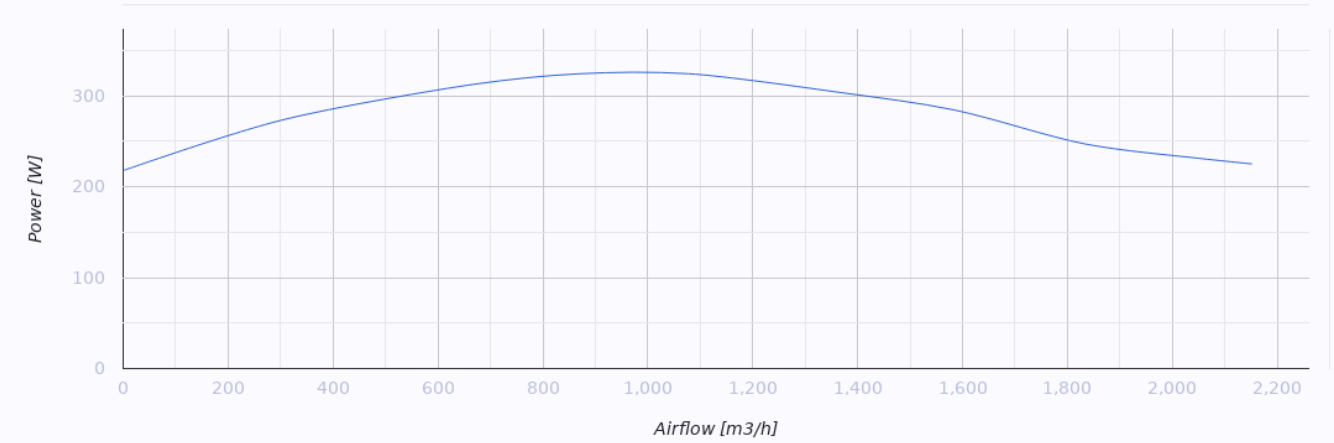

Dimensions

H	ØD	ØD1	L	L1
258	623	285	420	330

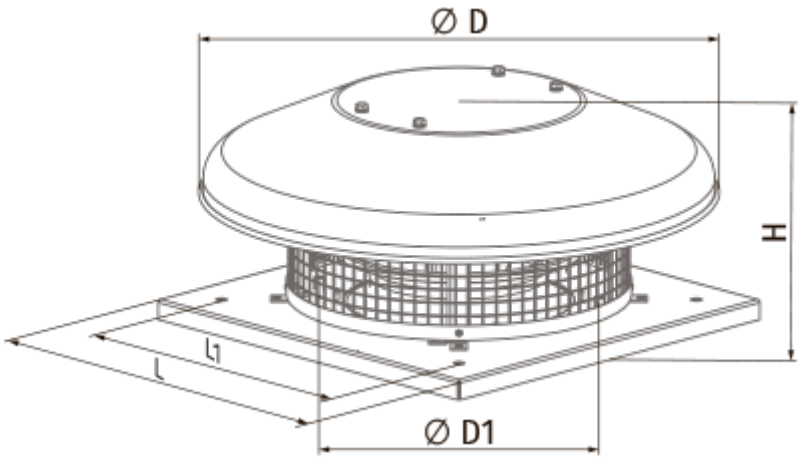

Ecodesign

Trademark	Blauberg
Model	Tower-HC 310 2E A
Type of drive installed	Integrated VSD
Type of heat recovery system	None
Nominal external pressure (Pa)	99
Maximum external leakage rates (%)	2.7
Static efficiency (%)	33.2
Sound power level (dB(A))	58
Declared typology	NRVU UVU
Effective electric power input (kW)	0.047