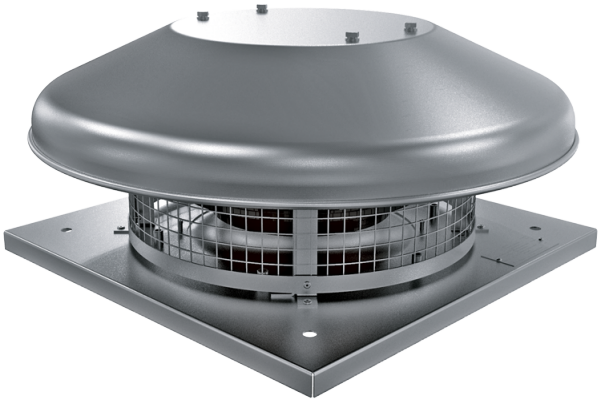

Tower-HC 280 4E

Roof centrifugal fans

- Sound pressure level LpA at 3 m: 46
- Impeller type: Centrifugal impeller with backward curved blades
- Casing material: Coated steel

	Unit of measurement	Tower-HC 280 4E	
Phases	-	1	
Minimum supply voltage	V	230	
Maximum supply voltage	V	230	
Power supply frequency	Hz	50	60
Rated power	W	125	
Unit current	A	0.61	
Maximum airflow	m³/h	1500	
Sound pressure level LpA at 3 m	dB(A)	46	
Weight	kg	10	
Transported air temperature (max)	°C	50	
Transported air temperature (min)	°C	-25	
Ingress protection rating	-	IPX4	
Ingress protection rating of the drive	-	IP44	
Size	mm	280	

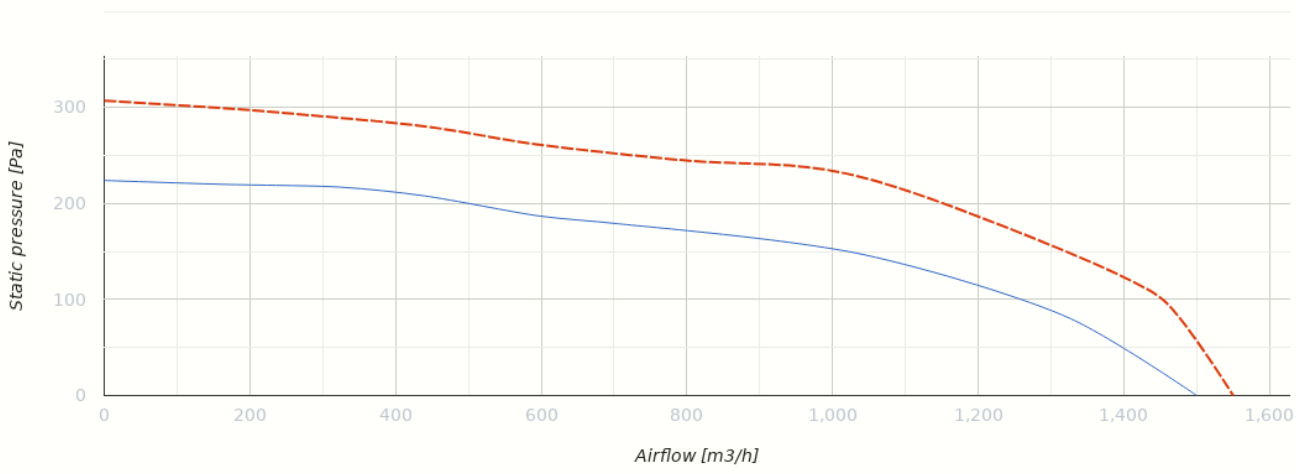

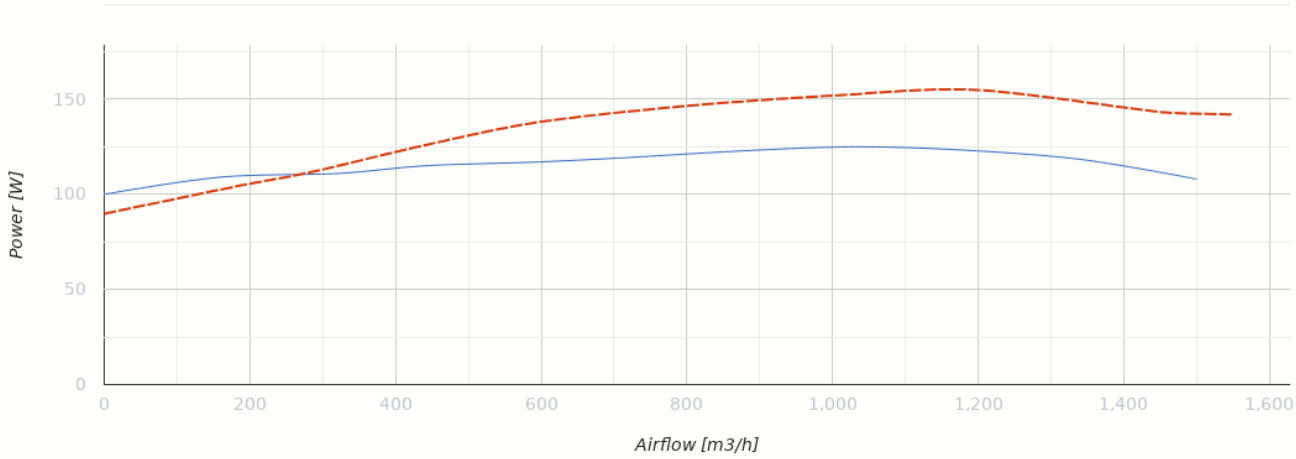

Dimensions

H	ØD	ØD1	L	L1
255	623	285	420	330

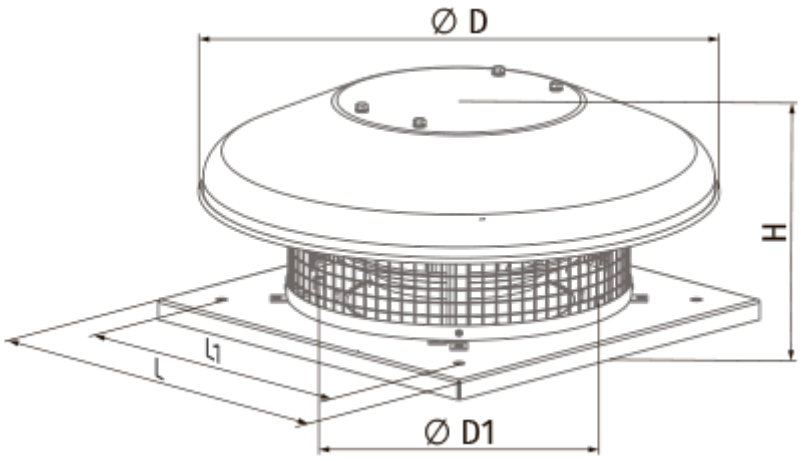

Ecodesign

Trademark	Blauberg
Model	Tower-HC 280 4E
Type of drive installed	Integrated VSD
Type of heat recovery system	None
Nominal external pressure (Pa)	147
Maximum external leakage rates (%)	2.7
Static efficiency (%)	34.7
Declared typology	NRVU UVU
Effective electric power input (kW)	0.125
Sound power level (dB(A))	65