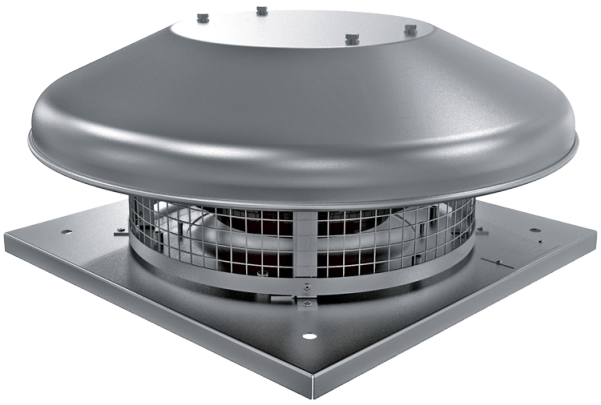

Tower-HC 225 4E

Roof centrifugal fans

- Sound pressure level LpA at 3 m: 45
- Impeller type: Centrifugal impeller with backward curved blades
- Casing material: Coated steel

	Unit of measurement	Tower-HC 225 4E
Phases	-	1
Minimum supply voltage	V	230
Maximum supply voltage	V	230
Power supply frequency	Hz	50
Rated power	W	49
Unit current	A	0.22
Maximum airflow	m³/h	760
Sound pressure level LpA at 3 m	dB(A)	45
Weight	kg	7
Transported air temperature (max)	°C	50
Transported air temperature (min)	°C	-25
Ingress protection rating	-	IPX4
Ingress protection rating of the drive	-	IP44
Size	mm	225

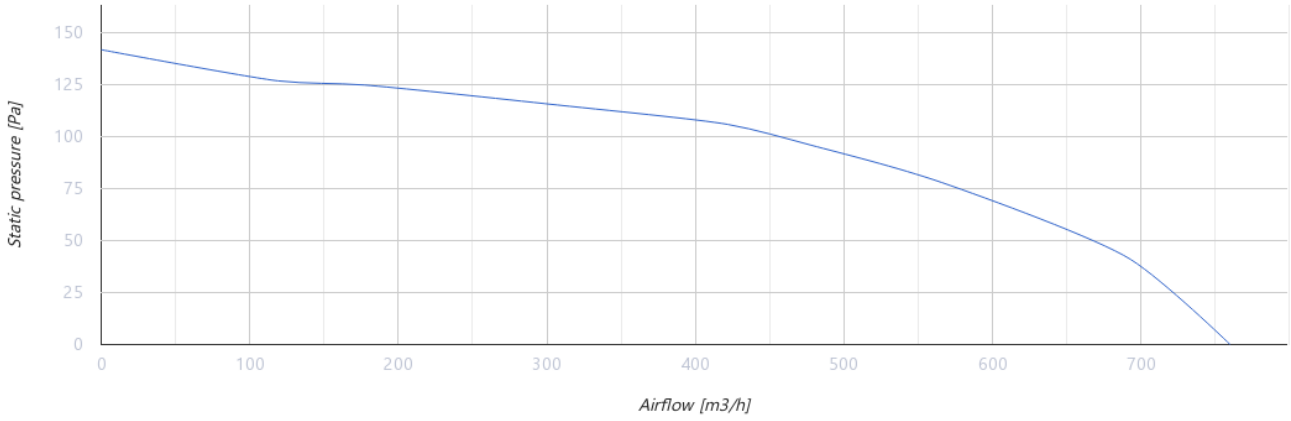

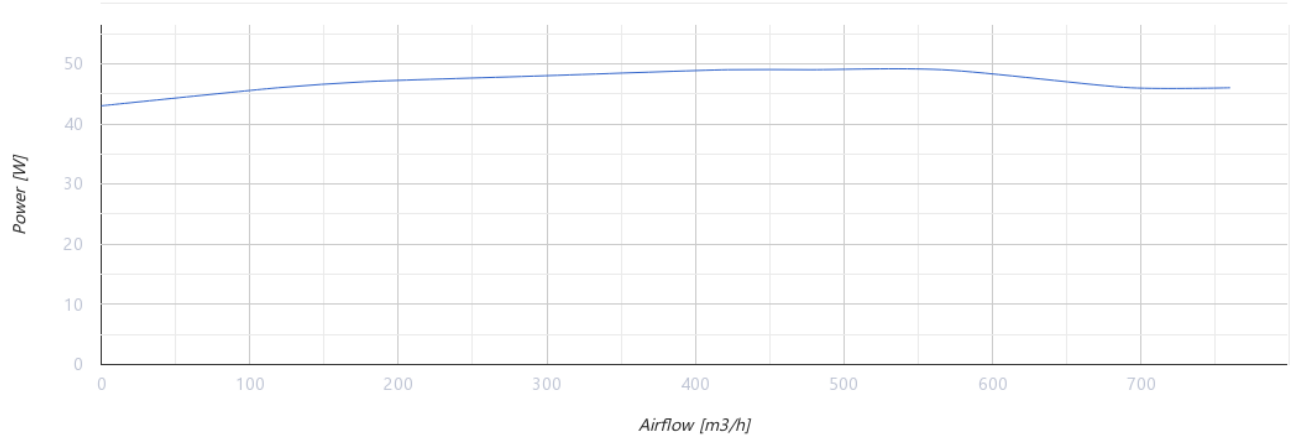

Dimensions

H	ØD	ØD1	L	L1
193	503	210	330	245

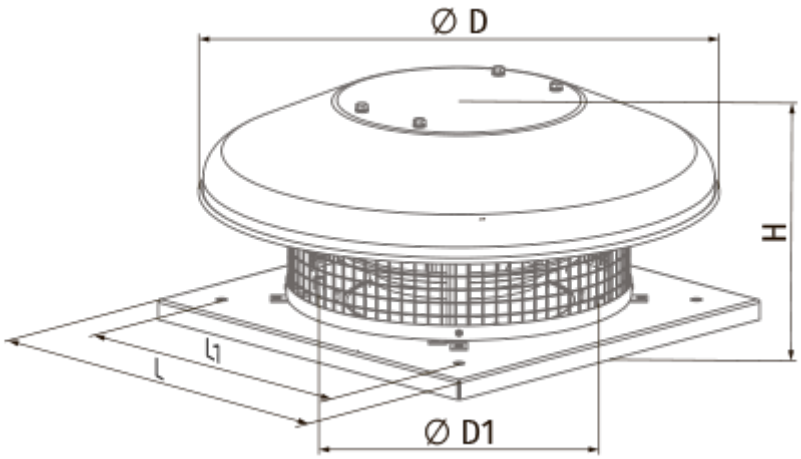

Ecodesign

Trademark	Blauberg
Model	Tower-HC 225 4E
Type of drive installed	Integrated VSD
Type of heat recovery system	None
Nominal external pressure (Pa)	96
Maximum external leakage rates (%)	2.7
Static efficiency (%)	31.3
Declared typology	NRVU UVU
Effective electric power input (kW)	0.049
Sound power level (dB(A))	57