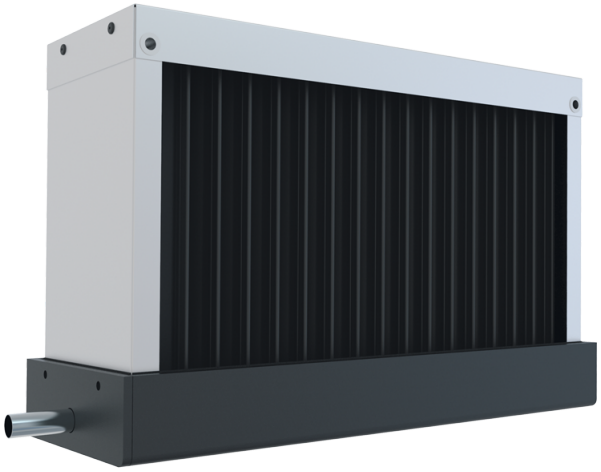

TA 600x300

Droplet separators

- Casing material: Galvanized steel

	Unit of measurement	TA 600x300
Weight	kg	7.1

Dimensions

A	B	C
703	393	163

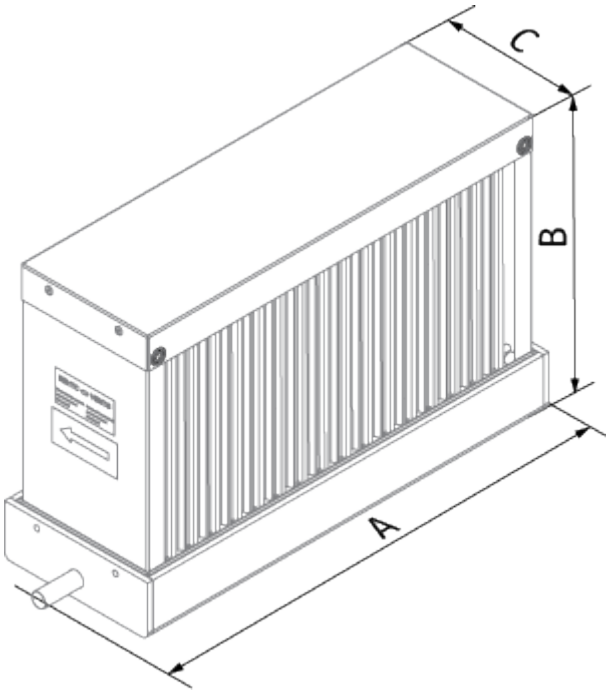
C
B
A