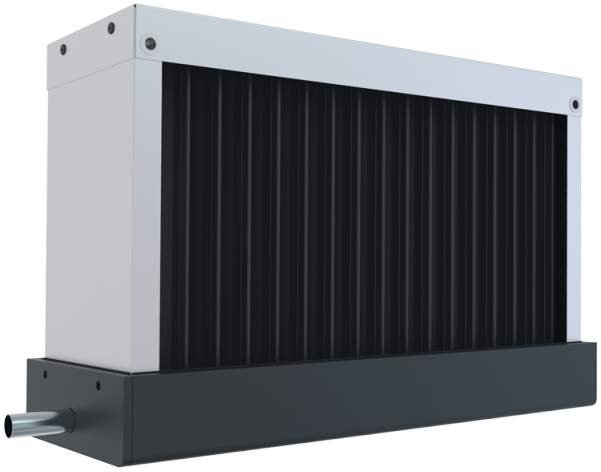

TA 500x250

Droplet separators

- Casing material: Galvanized steel

	Unit of measurement	TA 500x250
Weight	kg	5.7

Dimensions

A	B	C
603	343	163

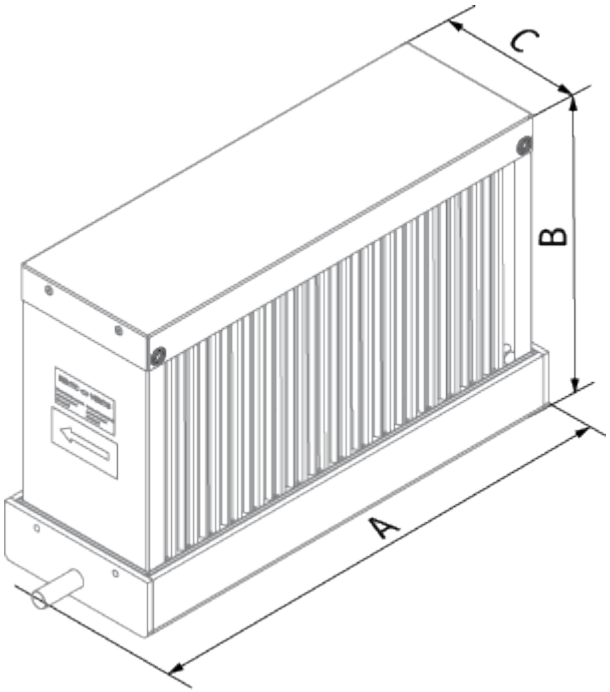
C
B
A