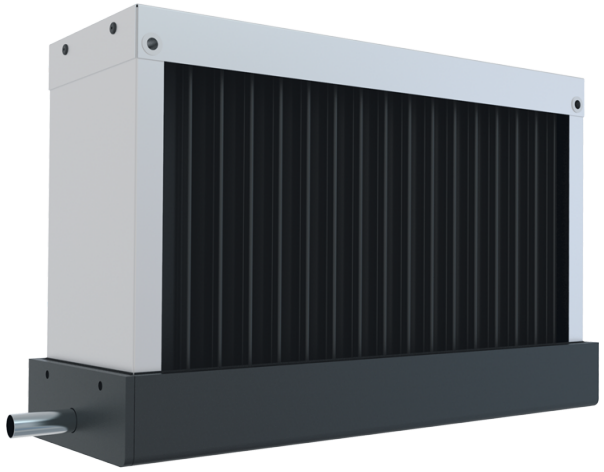

TA 400x200

Droplet separators

- Casing material: Galvanized steel

	Unit of measurement	TA 400x200
Weight	kg	4.5

Dimensions

A	B	C
503	293	163

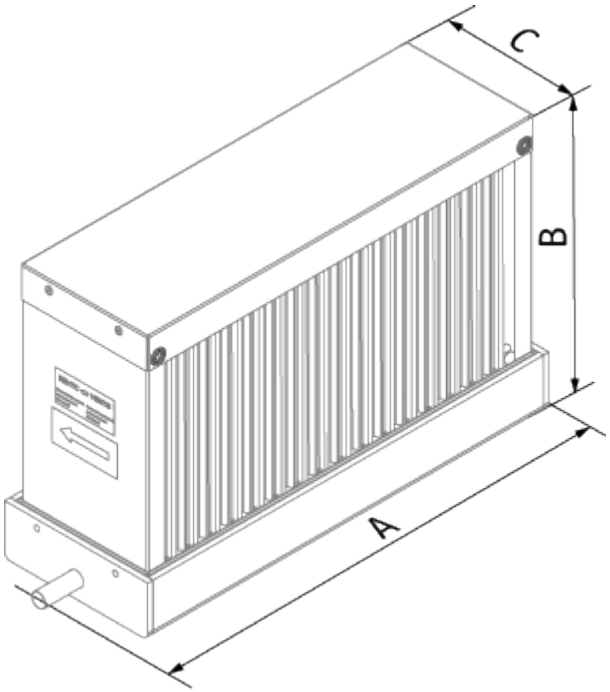
C
B
A