

Reneo SE 401-E R S21

Heat and energy recovery air handling units

- Power of electrical preheater: 1050
- Sound pressure level LpA at 3 m: 26
- Heat exchanger type: Counter flow
- Heat exchanger material: Enthalpy
- Supply filter: G4 / Coarse > 60% (option F7 / ePM1 60%)
- Extract filter: G4 / Coarse > 60%
- Sound-insulated casing
- Enthalpy heat exchanger
- Bypass: Auto
- Reheater: Optional
- Preheater: Built-in
- BMS protocol: ModBus
- Control: Smartphone
- Casing material: EPP
- Humidity sensor: Optional
- CO2 sensor: Optional
- PM2.5 sensor: Optional

	Unit of measurement	Reneo SE 401-E R S21
Connected air duct size	mm	160
Phases	-	1
Maximum supply voltage	V	230
Minimum supply voltage	V	230
Power supply frequency	Hz	50/60
Rated power	W	178
Power of electrical preheater	W	1050
Unit current	A	6.06
Maximum airflow	m³/h	445
Sound pressure level LpA at 3 m	dB(A)	26
Heat recovery efficiency, max	%	83
Heat exchanger type	-	Counter flow
Heat exchanger material	-	Enthalpy
Weight	kg	26
Supply filter	-	G4 / Coarse > 60% (option F7 / ePM1 60%)
Extract filter	-	G4 / Coarse > 60%
Transported air temperature (max)	°C	40
Transported air temperature (min)	°C	-25
Ambient air temperature min	°C	1

Ambient air temperature max	°C	40
Ingress protection rating	-	IP22
Ingress protection rating of the drive	-	IP44
Ambient air humidity max	%	60

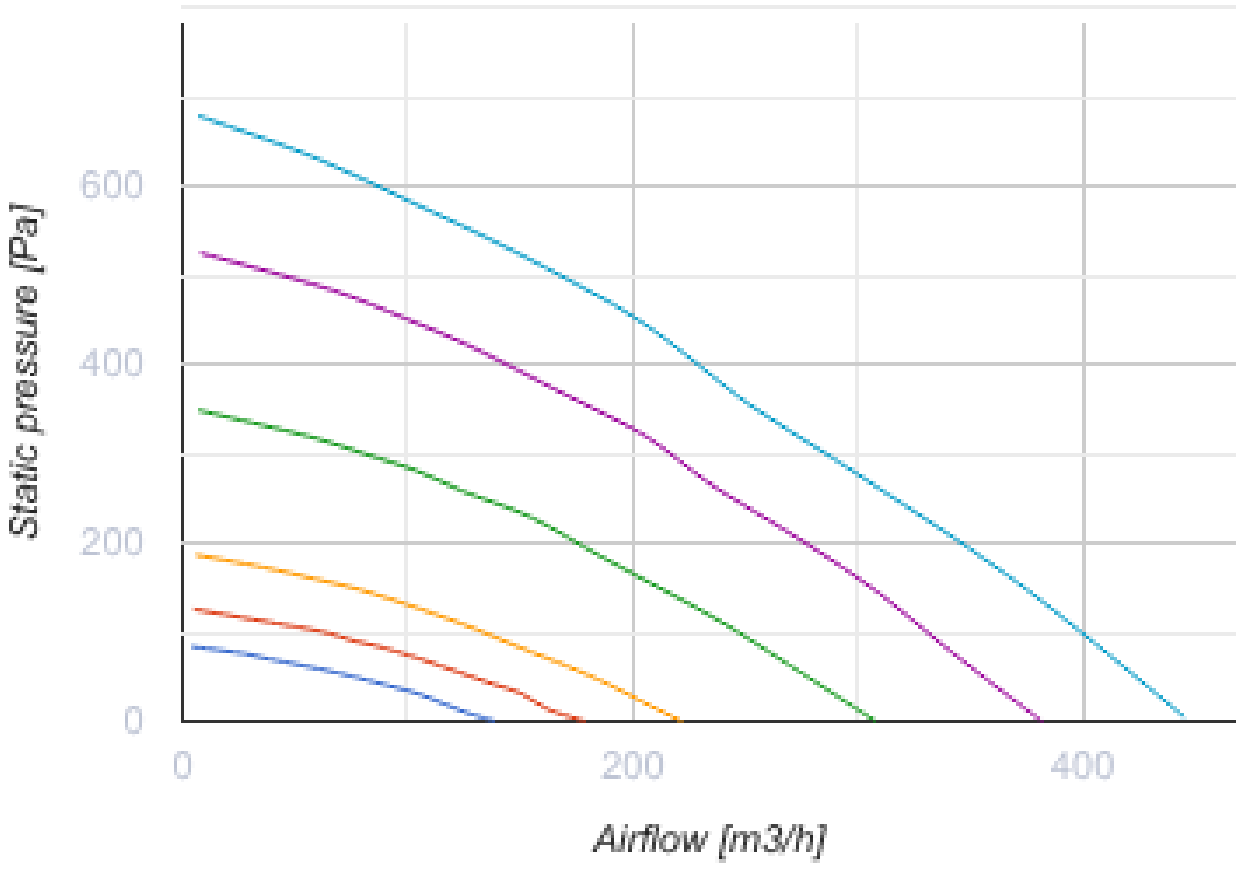

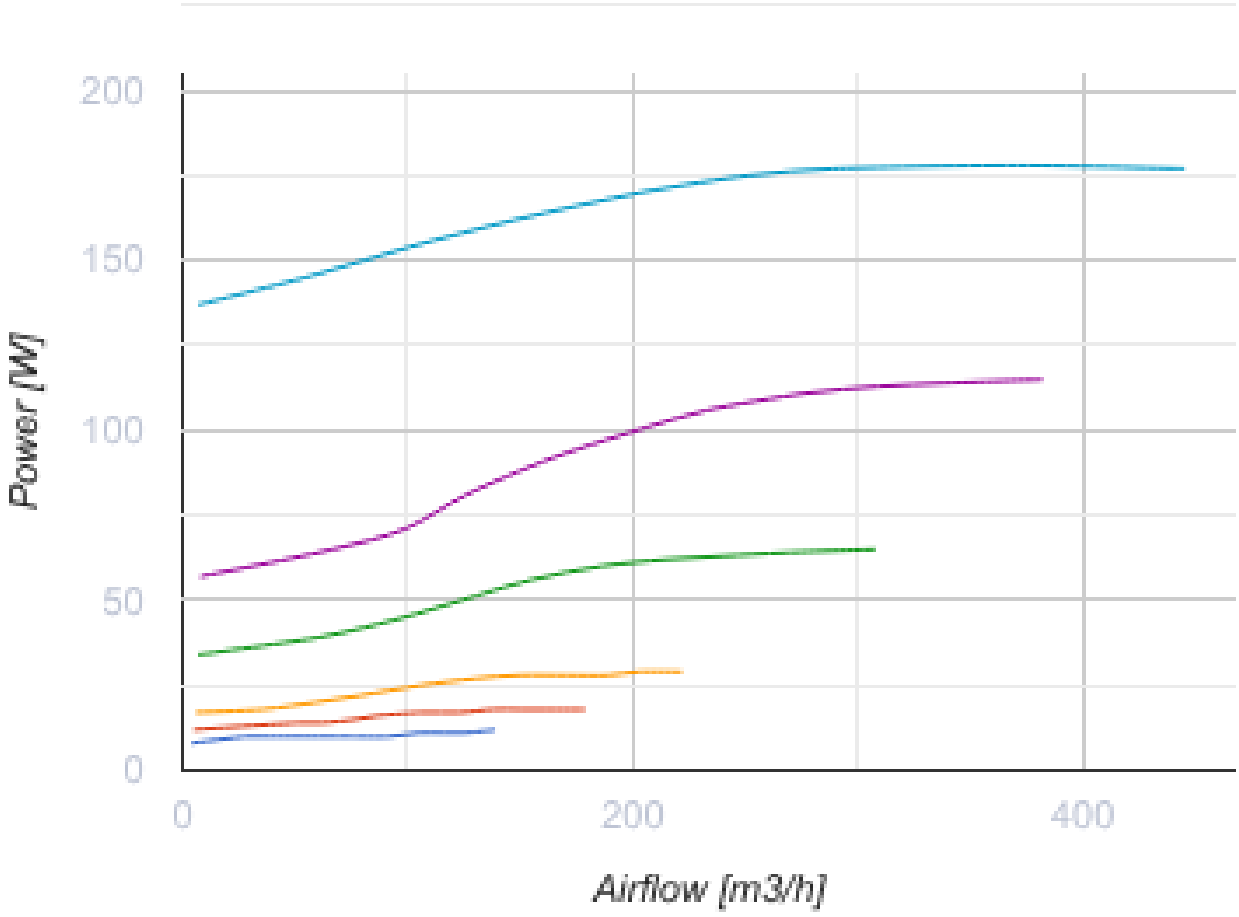

Dimensions

Ø D	H	H1	L	L1	W	W1
160	880	939	616	230	770	355

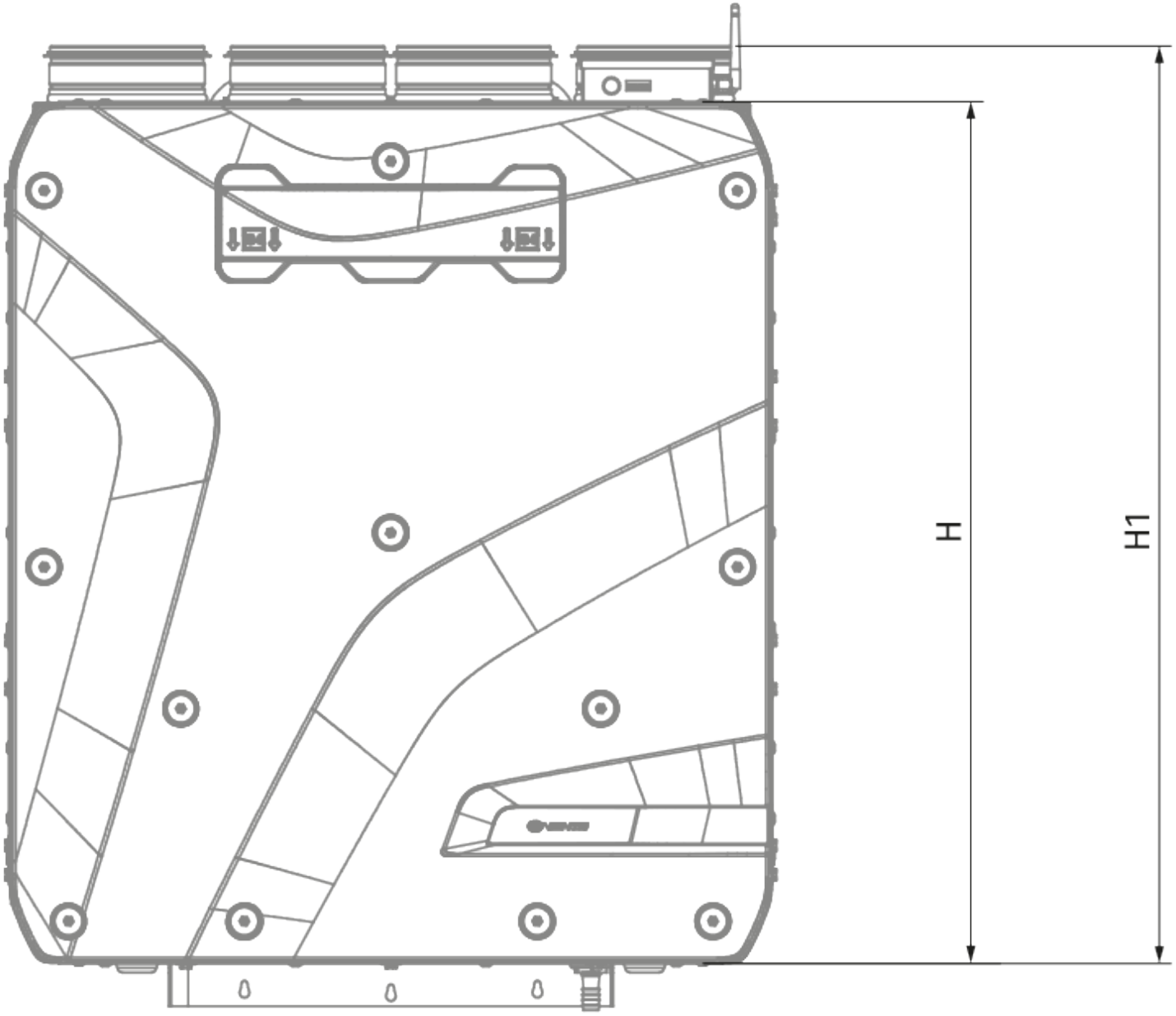
H
H1

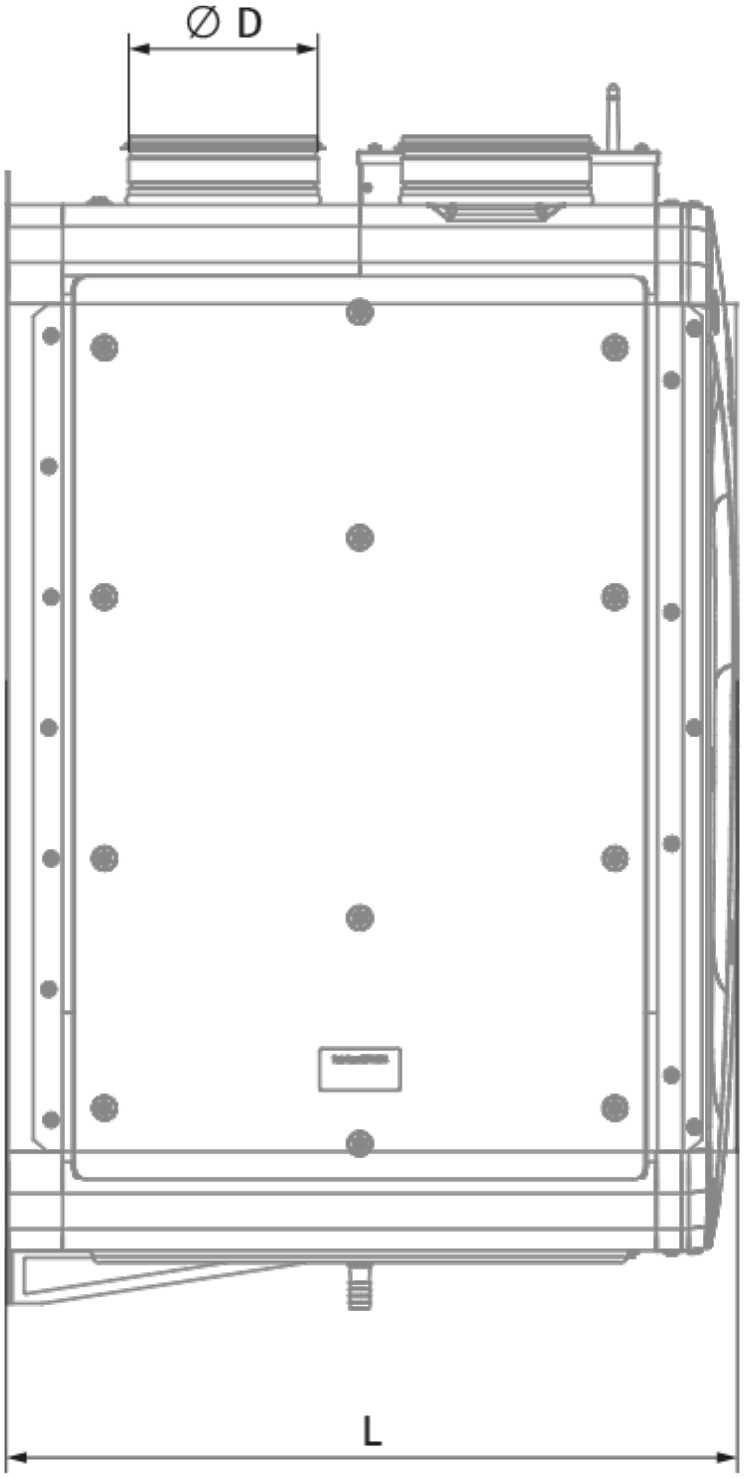
∅ D
L

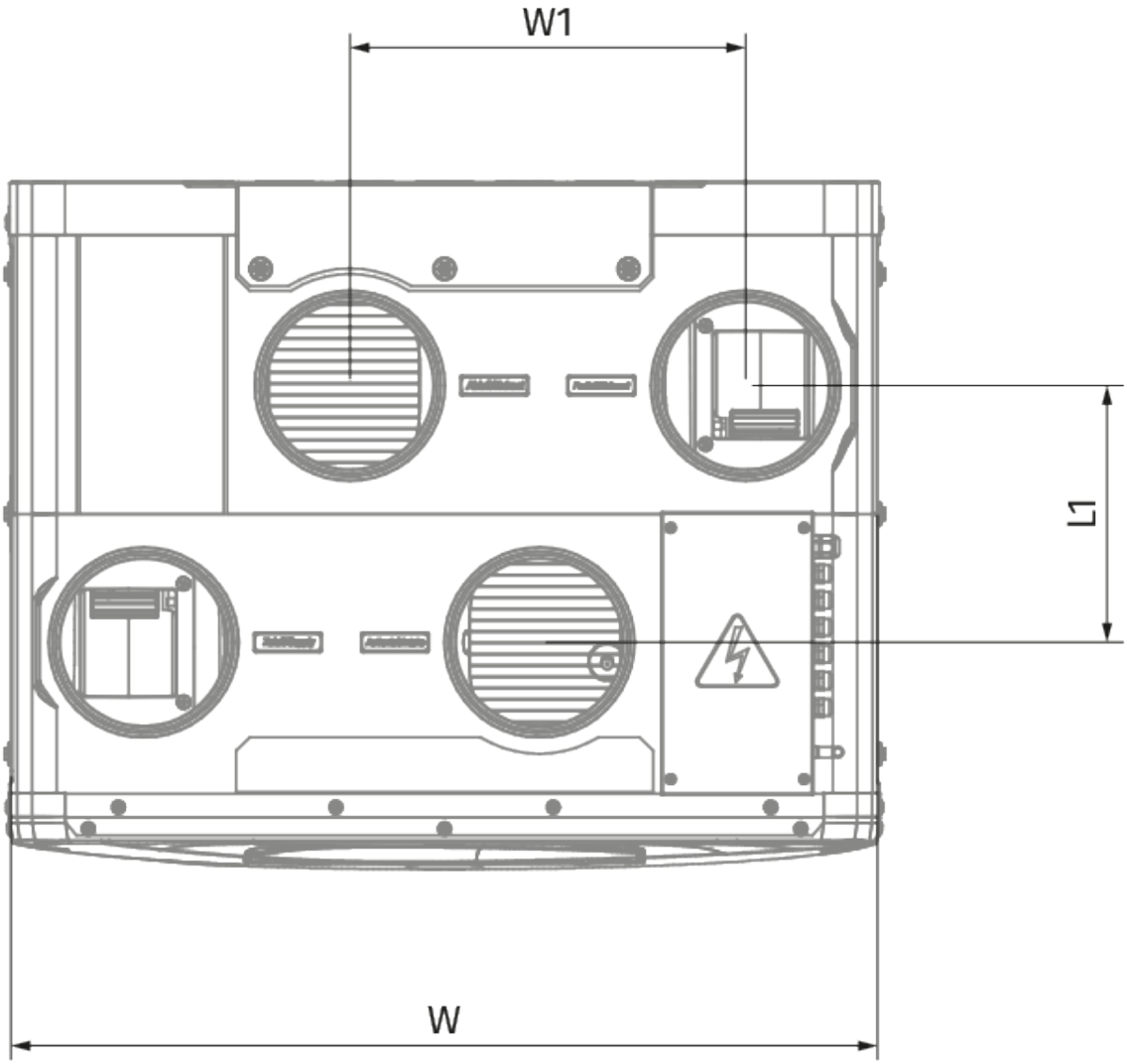
W1
L1
W

Ecodesign

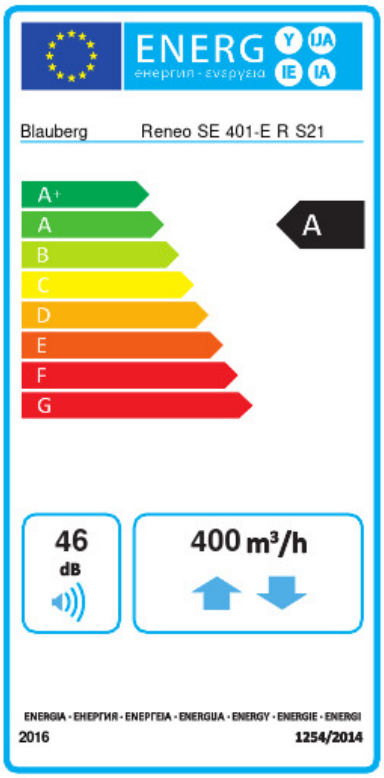

Trademark	Blauberg					
Model	Reneo SE 401-E R S21					
Specific energy consumption (SEC) (kWh/(m²/a))	Cold		Average		Warm	
	-79.3	A+	-41.5	A	-17.3	E
Type of ventilation unit	Bidirectional					
Type of drive installed	Variable speed					
Type of heat recovery system	Recuperative					
Thermal efficiency of heat recovery (%)	81					
Maximum flow rate (m³/h)	400					
Electric power input (W)	178					
Reference flow rate (m³/s)	0.076					
Reference pressure difference (Pa)	50					
Specific power input (SPI) (W/(m³/h))	0.233					
Control typology	Local demand control					
Maximum internal leakage rates (%)	2.7					
Maximum external leakage rates (%)	2.7					
Sound power level (dB(A))	46					
Declared typology	RVU BVU					
The annual electricity consumption (AEC) (kWh/a)	Cold		Average		Warm	
	7.1		1.7		1.2	
The annual heating saved (AHS) (kWh/a)	Cold		Average		Warm	
	88		45		20	

Accessories

For round ducts

Name	Photo	Description
SD 160/600		Silencers for round ducts
SD 160/900		Silencers for round ducts

SD 160/1200		Silencers for round ducts

For round ducts

Name	Photo	Description
VKA 160		Air dampers for round ducts

Electrical heaters

Name	Photo	Description
ENH 160-0.8-1 S21 V.2		Duct heater for supply air reheating
ENH 160-1.2-1 S21 V.2		Duct heater for supply air reheating
ENH 160-1.7-1 S21 V.2		Duct heater for supply air reheating
ENH 160-2.0-1 S21 V.2		Duct heater for supply air reheating

Control Panels

Name	Photo	Description
S25		LCD control panel
S22		Control panels
S22 Wi-Fi		Control panels

CO2 sensors

Name	Photo	Description
CD-1		CO2 sensors

CD-2		CO2 sensors

Humidity sensors

Name	Photo	Description
FS2		Humidity sensor

Other accessories

Name	Photo	Description
FP 496x150x60 ePM1 60 % (F7)		F7 panel filter
FP 496x150x60 Coarse 90 % (G4)		G4 panel filter
EP-Reneo S 351		Decorative panel

Electric actuators

Name	Photo	Description
Belimo TF230		Electric actuators