

Reneo S 400 R S14

Heat and energy recovery air handling units

- Sound pressure level LpA at 3 m: 26
- Heat exchanger type: Counter flow
- Heat exchanger material: Polystyrene
- Supply filter: G4 / Coarse > 60% (option F7 / ePM1 60%)
- Extract filter: G4 / Coarse > 60%
- Sound-insulated casing
- Bypass: Manual
- Control: Wired control panel
- Casing material: EPP
- Humidity sensor: Optional
- CO2 sensor: Optional

	Unit of measurement	Reneo S 400 R S14
Connected air duct size	mm	160
Phases	-	1
Maximum supply voltage	V	230
Minimum supply voltage	V	230
Power supply frequency	Hz	50/60
Rated power	W	178
Unit current	A	1.4
Maximum airflow	m³/h	445
Sound pressure level LpA at 3 m	dB(A)	26
Heat recovery efficiency, max	%	93
Heat exchanger type	-	Counter flow
Heat exchanger material	-	Polystyrene
Weight	kg	26
Supply filter	-	G4 / Coarse > 60% (option F7 / ePM1 60%)
Extract filter	-	G4 / Coarse > 60%
Transported air temperature (max)	°C	40
Transported air temperature (min)	°C	-25
Ambient air temperature min	°C	1
Ambient air temperature max	°C	40
Ingress protection rating	-	IP22
Ingress protection rating of the drive	-	IP44

Ambient air humidity max	%	60

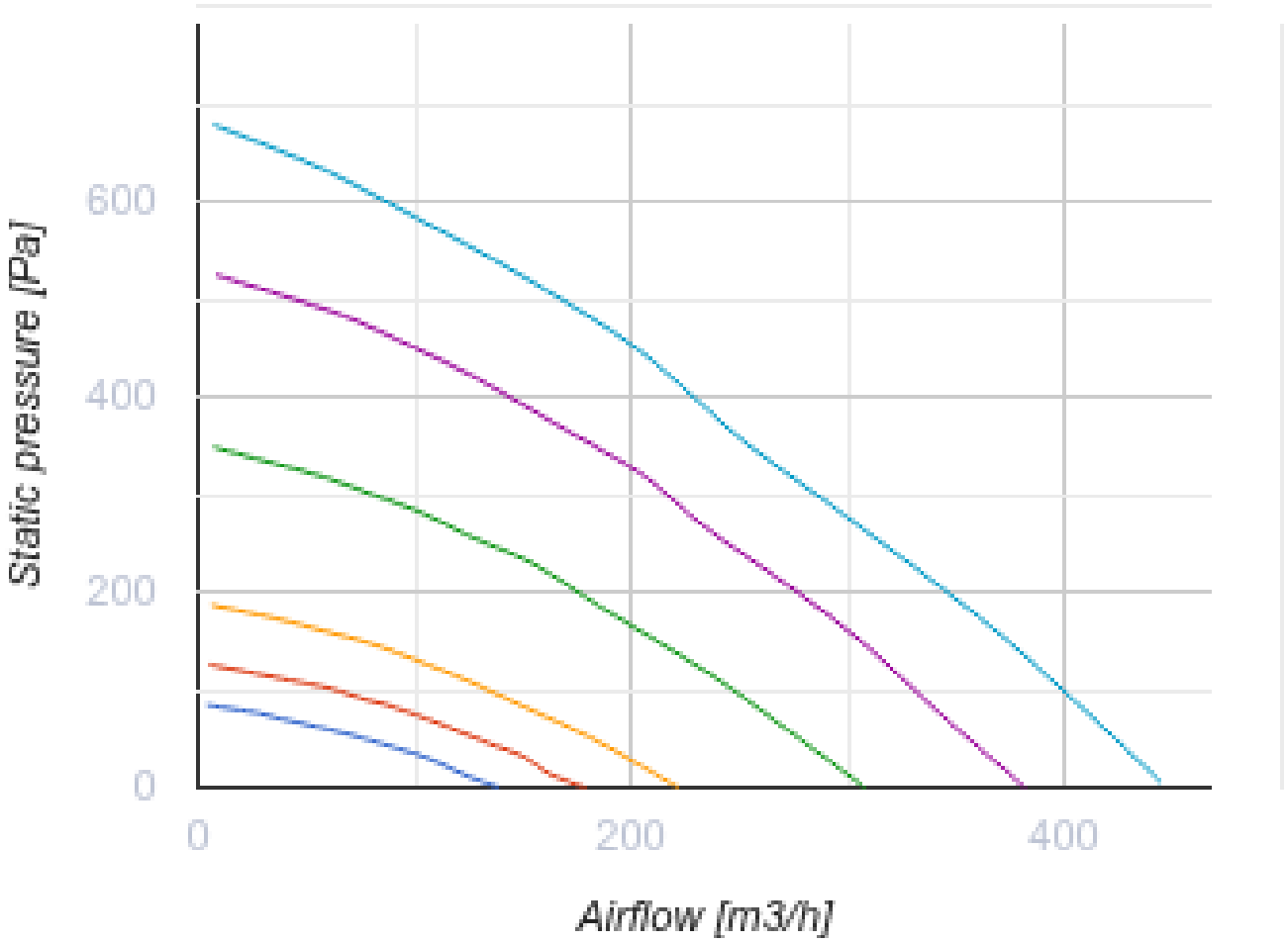

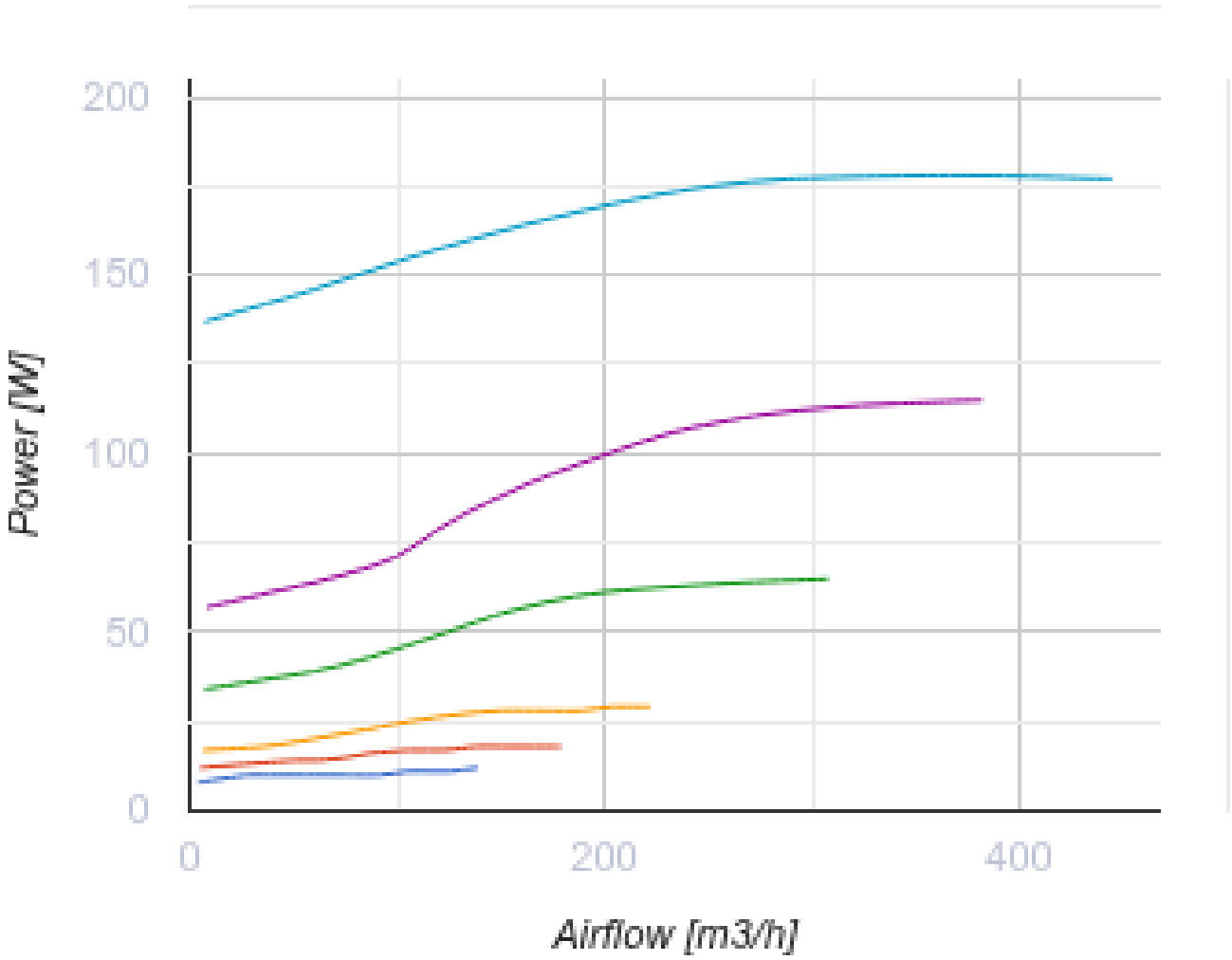

Dimensions

Ø D	H	H1	L	L1	W	W1
160	880	939	616	230	770	355

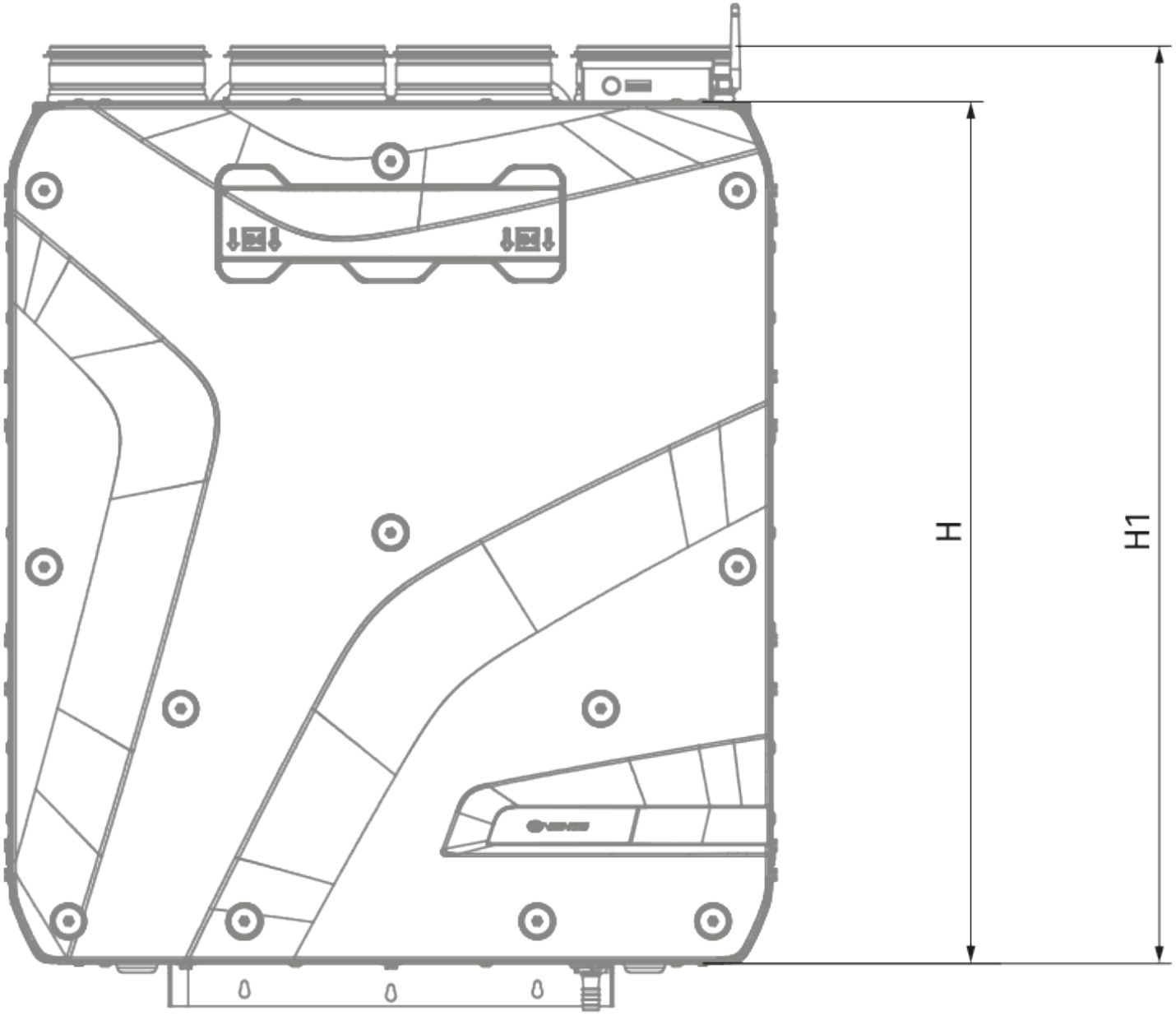
H
H1

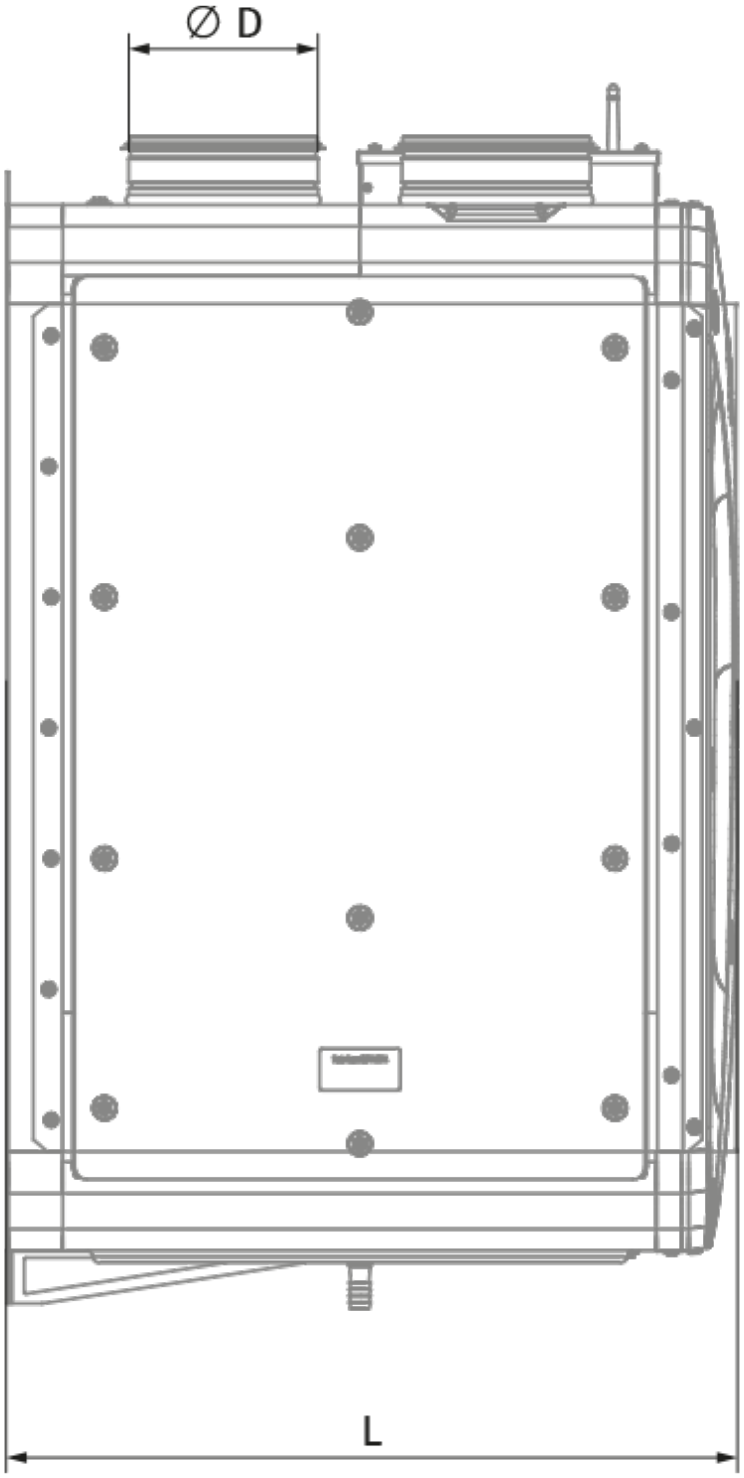
∅ D
L

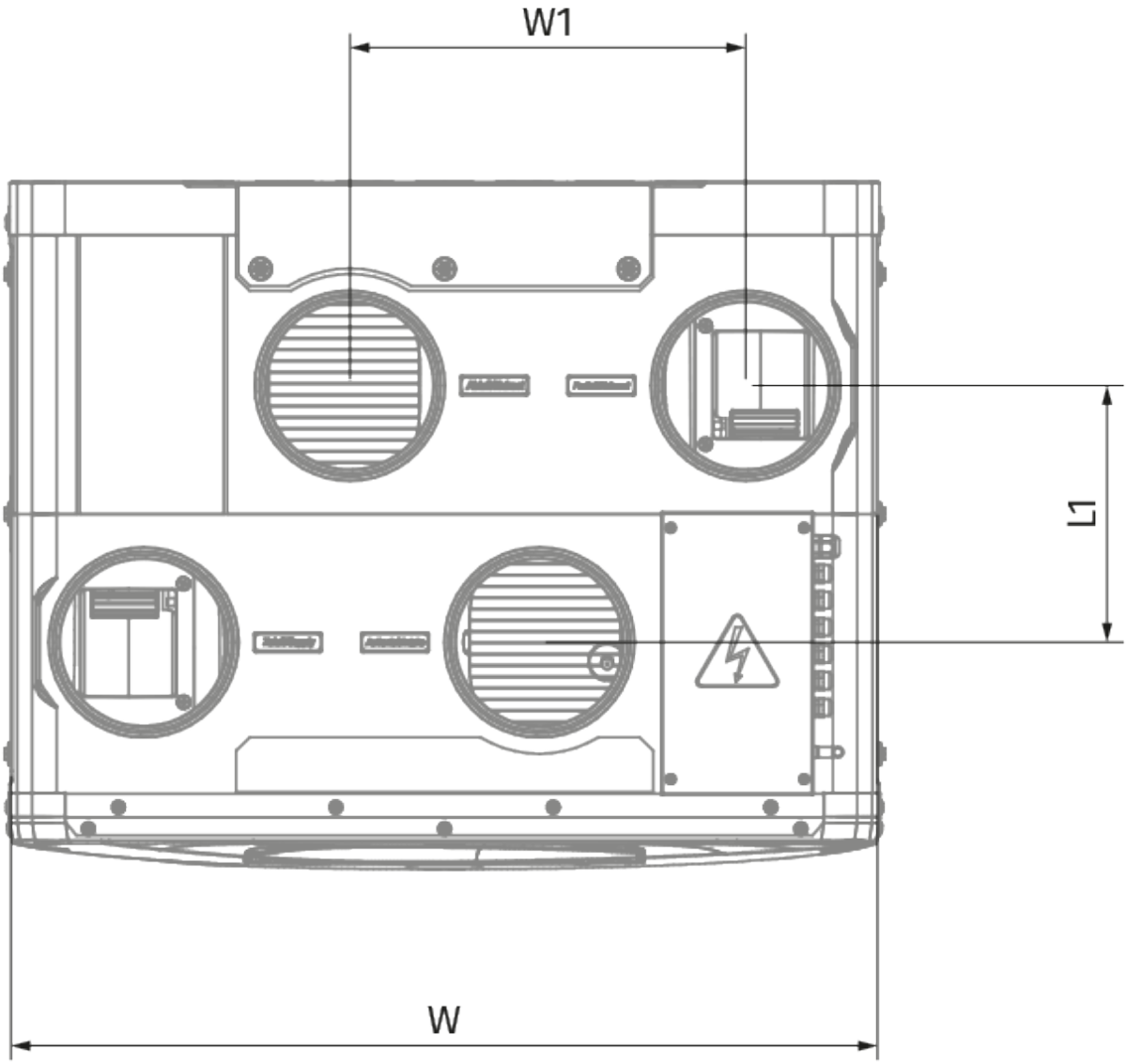
W1
L1
W

Ecodesign

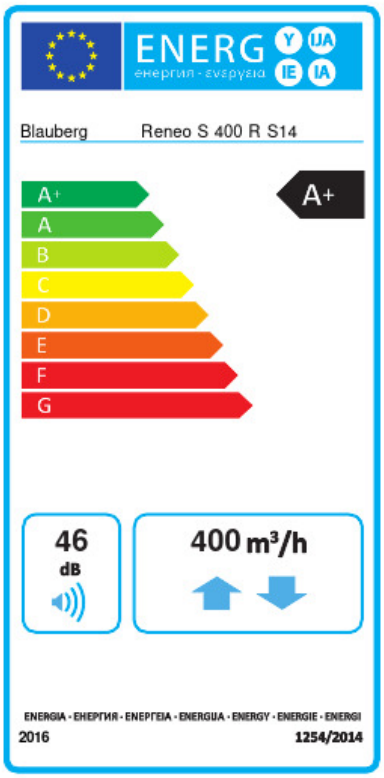

Trademark	Blauberg					
Model	Reneo S 400 R S14					
Specific energy consumption (SEC) (kWh/(m²/a))	Cold		Average		Warm	
	-82.9	A+	-43.4	A+	-18.1	E
Type of ventilation unit	Bidirectional					
Type of drive installed	Variable speed					
Type of heat recovery system	Recuperative					
Thermal efficiency of heat recovery (%)	90					
Maximum flow rate (m³/h)	400					
Electric power input (W)	178					
Reference flow rate (m³/s)	0.076					
Reference pressure difference (Pa)	50					
Specific power input (SPI) (W/(m³/h))	0.233					
Control typology	Local demand control					
Maximum internal leakage rates (%)	2.7					
Maximum external leakage rates (%)	2.7					
Sound power level (dB(A))	46					
Declared typology	RVU BVU					
The annual electricity consumption (AEC) (kWh/a)	Cold		Average		Warm	
	7.1		1.7		1.2	
The annual heating saved (AHS) (kWh/a)	Cold		Average		Warm	
	92		47		21	

Accessories

Condensation drainage

Name	Photo	Description
SFK 20x32		Hydraulic syphon for condensate drainage

For round ducts

Name	Photo	Description

SD 160/600		Silencers for round ducts
SD 160/900		Silencers for round ducts
SD 160/1200		Silencers for round ducts

For round ducts

Name	Photo	Description
VKA 160		Air dampers for round ducts

CO2 sensors

Name	Photo	Description
CD-1		CO2 sensors
CD-2		CO2 sensors

Humidity sensors

Name	Photo	Description
FS2		Humidity sensor

Other accessories

Name	Photo	Description
FP 496x150x60 ePM1 60 % (F7)		F7 panel filter

FP 496x150x60 Coarse 90 % (G4)		G4 panel filter

Electric actuators

Name	Photo	Description
Belimo TF230		Electric actuators