

Reneo S 380-E L S21 CF

Heat and energy recovery air handling units

- Sound pressure level LpA at 3 m: 26
- Heat exchanger type: Counter flow
- Heat exchanger material: Enthalpy
- Extract filter: Coarse > 60 %
- Sound-insulated casing
- Enthalpy heat exchanger
- Bypass: Auto
- Reheater: Optional
- BMS protocol: ModBus
- Control: Smartphone
- Casing material: EPP
- Humidity sensor: Optional
- CO2 sensor: Optional
- PM2.5 sensor: Optional

	Unit of measurement	Reneo S 380-E L S21 CF
Connected air duct size	mm	160
Phases	-	1
Minimum supply voltage	V	230
Maximum supply voltage	V	230
Power supply frequency	Hz	50/60
Rated power	W	247
Unit current	A	1.9
Maximum airflow	m³/h	390
Sound pressure level LpA at 3 m	dB(A)	26
Heat recovery efficiency, max	%	83
Heat exchanger type	-	Counter flow
Heat exchanger material	-	Enthalpy
Weight	kg	26
Extract filter	-	Coarse > 60 %
Transported air temperature (max)	°C	40
Transported air temperature (min)	°C	-25
Ambient air temperature min	°C	1
Ambient air temperature max	°C	40
Ingress protection rating	-	IP22
Ambient air humidity max	%	60

Ingress protection rating of the drive	-	IP44

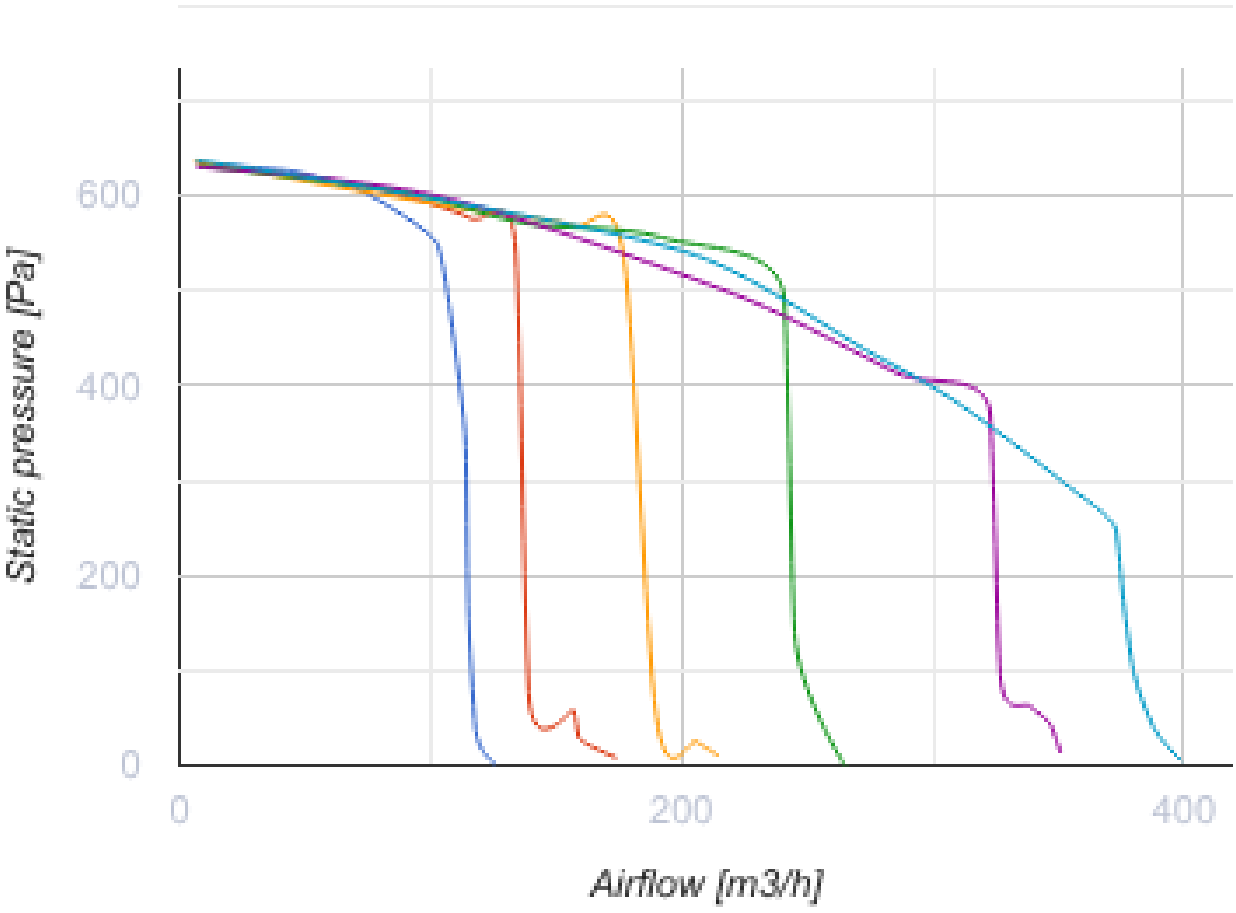

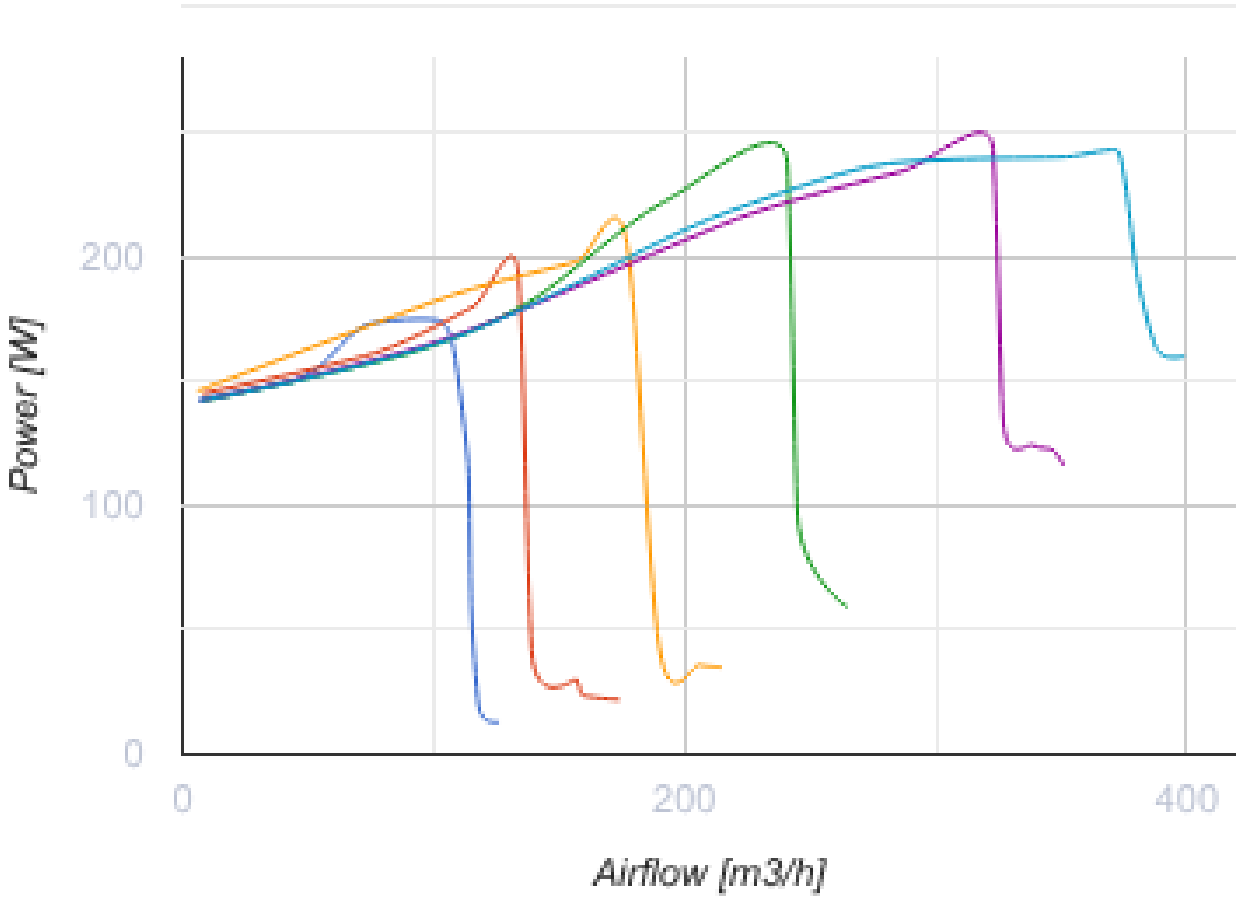

Dimensions

Ø D	H	H1	L	L1	W	W1
160	880	939	616	230	770	355

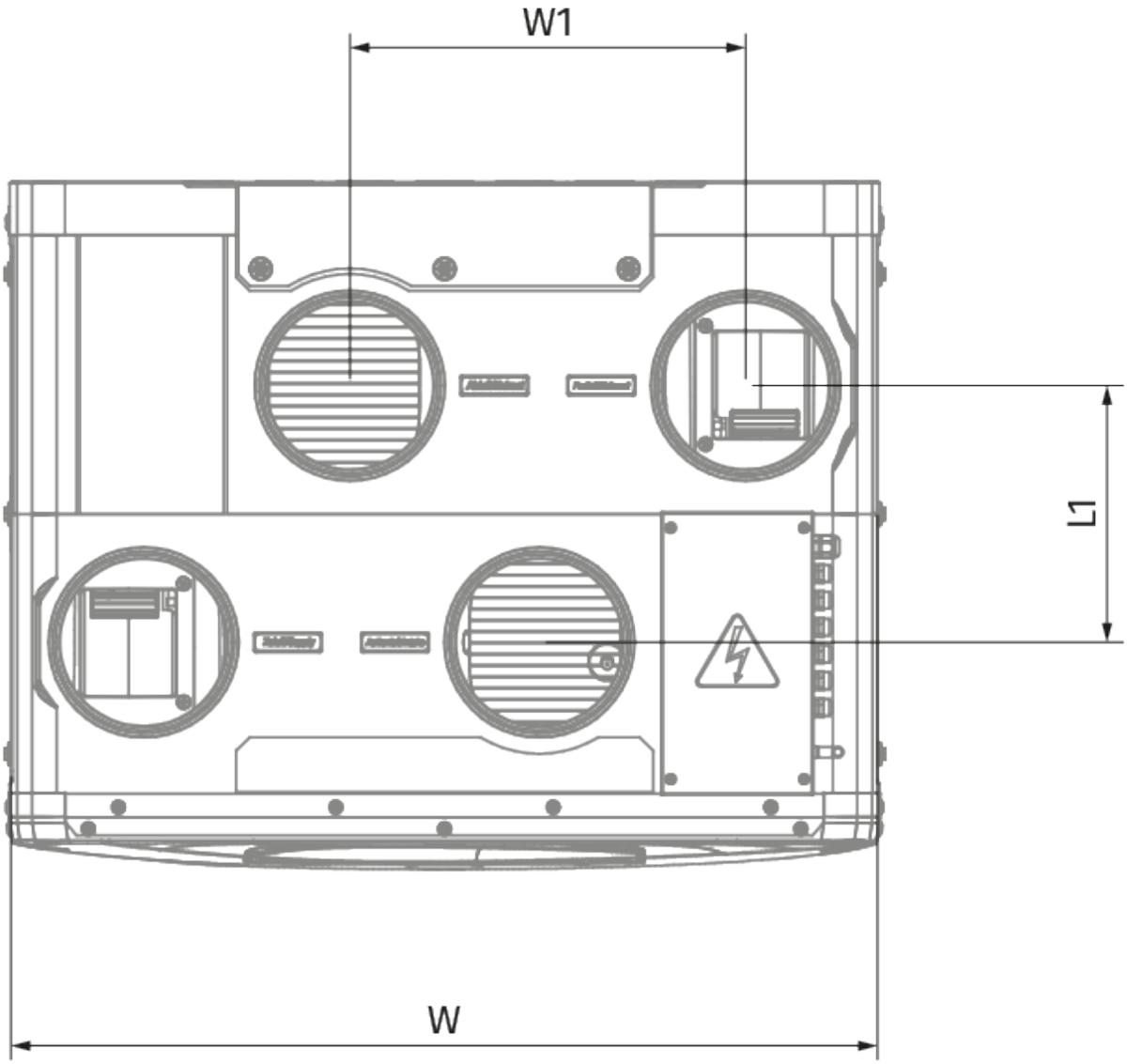
W1
L1
W

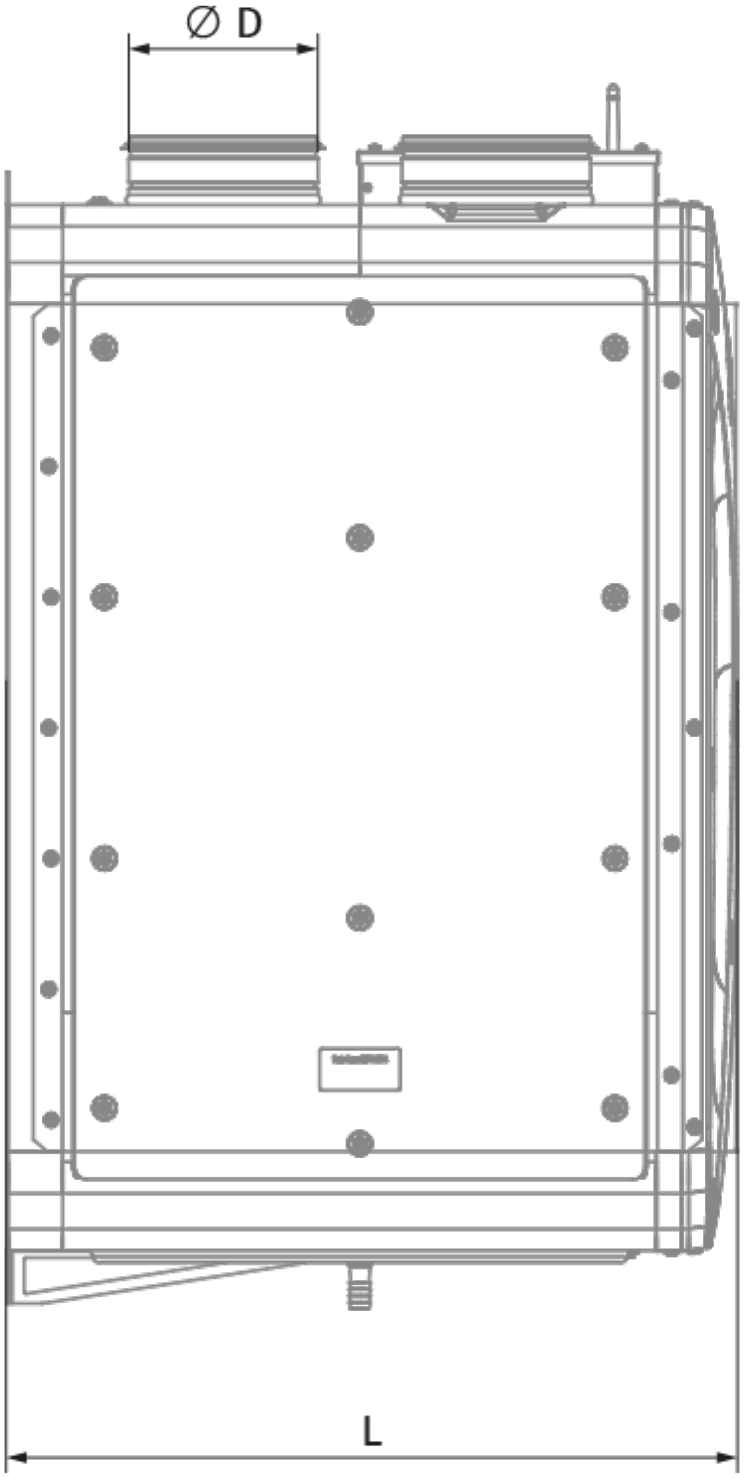
∅ D
L

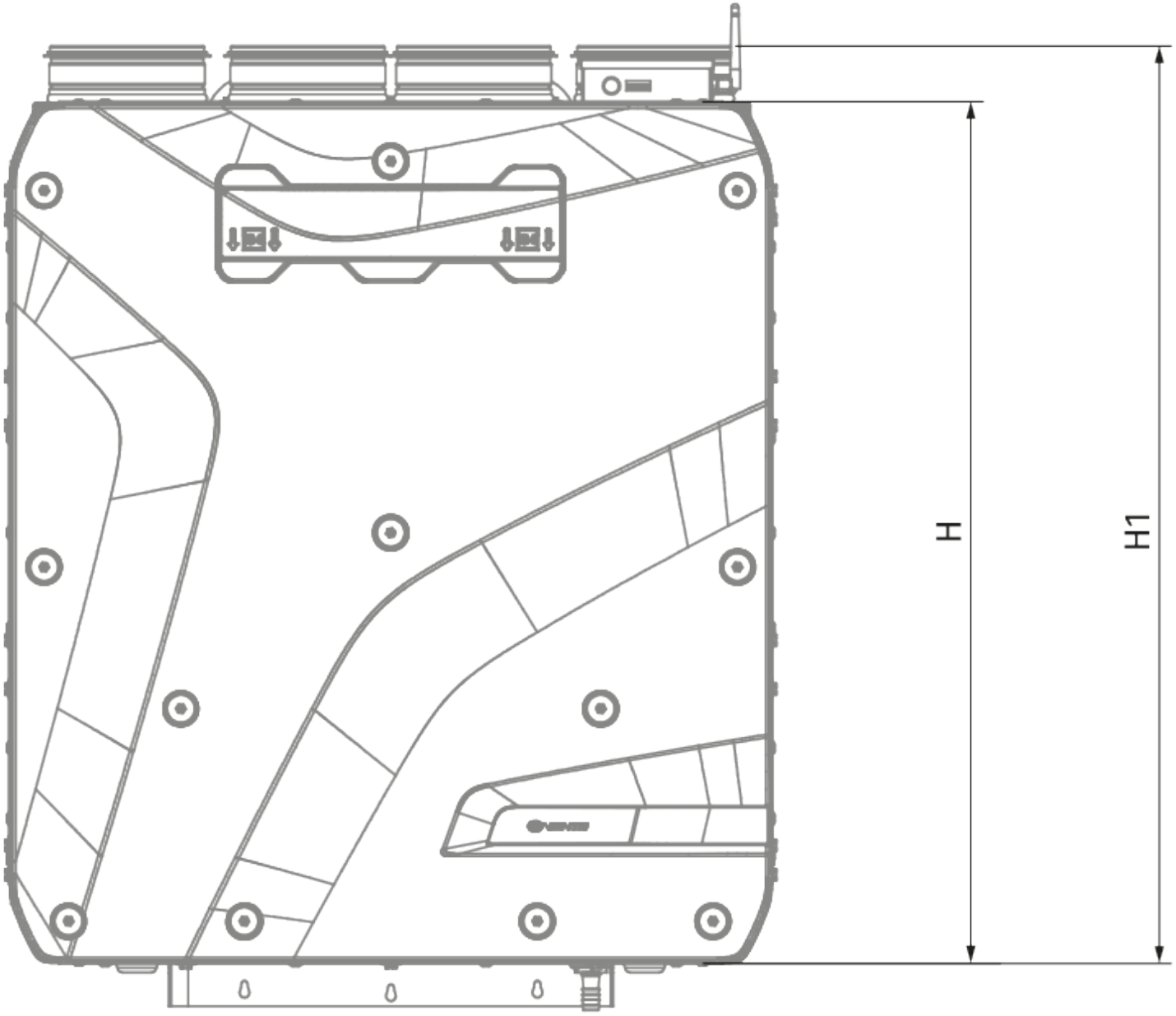
H
H1

Ecodesign

Trademark	Blauberg					
Model	Reneo S 380-E L S21 CF					
Specific energy consumption (SEC) (kWh/(m²/a))	Cold		Average		Warm	
	-78.6	A+	-40.8	A	-16.6	E
Type of ventilation unit	Bidirectional					
Type of drive installed	Variable speed					
Type of heat recovery system	Recuperative					
Thermal efficiency of heat recovery (%)	81					
Maximum flow rate (m³/h)	390					
Electric power input (W)	194					
Reference flow rate (m³/s)	0.075					
Reference pressure difference (Pa)	50					
Specific power input (SPI) (W/(m³/h))	0.286					
Control typology	Local demand control					
Maximum internal leakage rates (%)	2.7					
Maximum external leakage rates (%)	2.7					
Sound power level (dB(A))	46					
The annual electricity consumption (AEC) (kWh/a)	Cold		Average		Warm	
	734		197		152	
The annual heating saved (AHS) (kWh/a)	Cold		Average		Warm	
	8817		4507		2038	

Accessories

For round ducts

Name	Photo	Description
SD 160/600		Silencers for round ducts
SD 160/900		Silencers for round ducts

SD 160/1200		Silencers for round ducts

For round ducts

Name	Photo	Description
VKA 160		Air dampers for round ducts

Electrical heaters

Name	Photo	Description
ENH 160-0.8-1 S21 V.2		Duct heater for supply air reheating
ENH 160-1.2-1 S21 V.2		Duct heater for supply air reheating
ENH 160-1.7-1 S21 V.2		Duct heater for supply air reheating
ENH 160-2.0-1 S21 V.2		Duct heater for supply air reheating

Control Panels

Name	Photo	Description
S25		LCD control panel
S22		Control panels
S22 Wi-Fi		Control panels

CO2 sensors

Name	Photo	Description
CD-1		CO2 sensors

CD-2		CO2 sensors

Humidity sensors

Name	Photo	Description
FS2		Humidity sensor

Other accessories

Name	Photo	Description
FP 496x150x60 ePM1 60 % (F7)		F7 panel filter
FP 496x150x60 Coarse 90 % (G4)		G4 panel filter

Electric actuators

Name	Photo	Description
Belimo TF230		Electric actuators