

# KZ 150

Clamps for round ducts

- Casing material: Galvanized steel

| | Unit of measurement | KZ 150 |
|---|---|---|
| Weight | kg | 0.296 |

## Dimensions

| ØD | H |
|---|---|
| 150 | 224 |

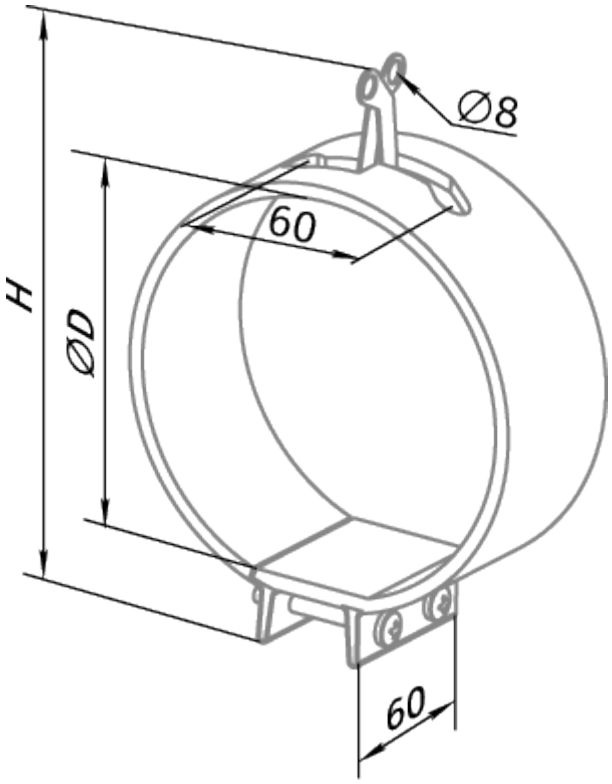
Ø8
60
H
ØD
60