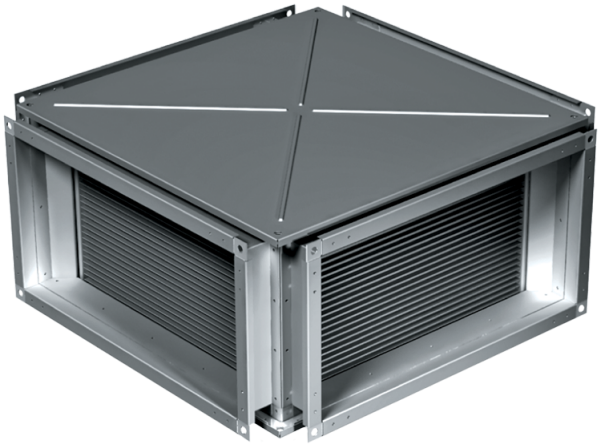

KWT 90x50

Plate heat exchangers for rectangular ducts

- Casing material: Galvanized steel

	Unit of measurement	KWT 90x50
Weight	kg	78.8

Dimensions

B	B1	B2	H	H1	H2	H3	L
900	920	940	500	520	540	575	1130

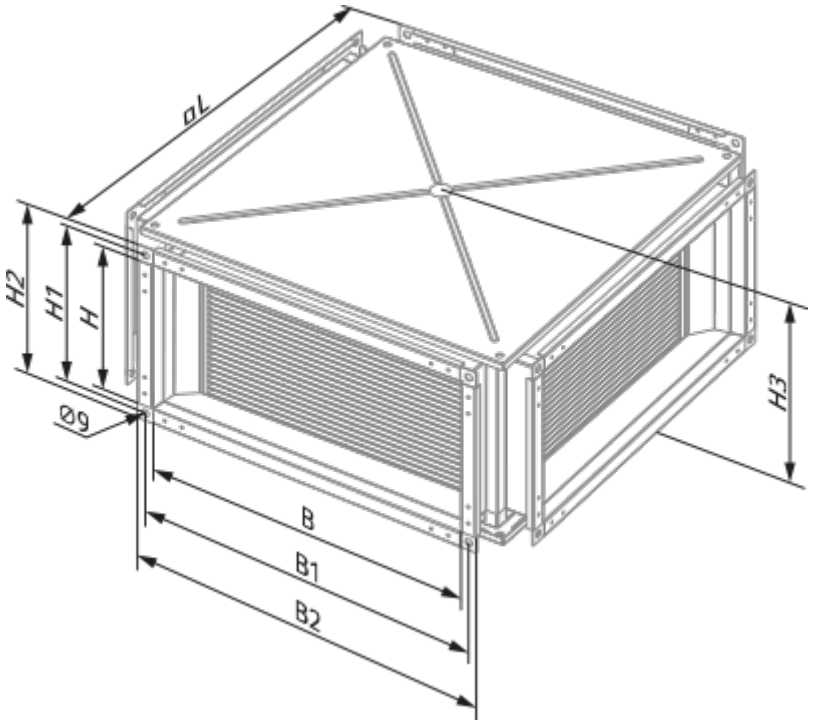
øL
H2
H1
H
Ø9
H3
B
B1
B2