

KOMFORT Ultra 350-E ME

The KOMFORT Ultra ME series is the first in the Blauberg central fresh air system to adopt the EPP unibody structure, which has excellent sealing, noise reduction and heat preservation performance

- Sound pressure level LpA at 3 m: 25-46
- Heat exchanger type: Cross flow
- Supply filter: G4+G3 composite filter, H13 silver ion composite filter
- Extract filter: G4+G3 composite filter
- Sound-insulated casing
- Enthalpy heat exchanger
- Casing material: Coated steel

	Unit of measurement	KOMFORT Ultra 350-E ME
Maximum supply voltage	V	220
Minimum supply voltage	V	220
Power supply frequency	Hz	50
Rated power	W	113
Unit current	A	0.77
Maximum airflow	m³/h	350
Sound pressure level LpA at 3 m	dB(A)	25-46
Heat recovery efficiency, max	%	73
Heat exchanger type	-	Cross flow
Weight	kg	23
Supply filter	-	G4+G3 composite filter, H13 silver ion composite filter
Extract filter	-	G4+G3 composite filter
Transported air temperature (max)	°C	60
Transported air temperature (min)	°C	-25

Dimensions

ØD	B	H	H1	L	L1
125	285	463	63	732	836

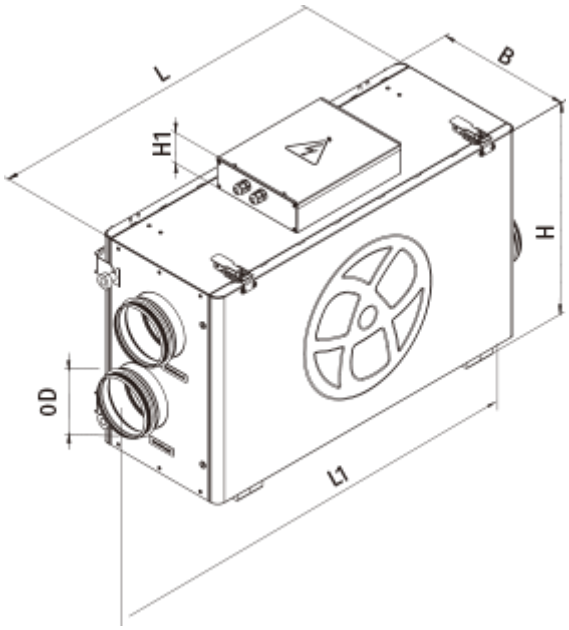
L
B
H1
H
OD
L1