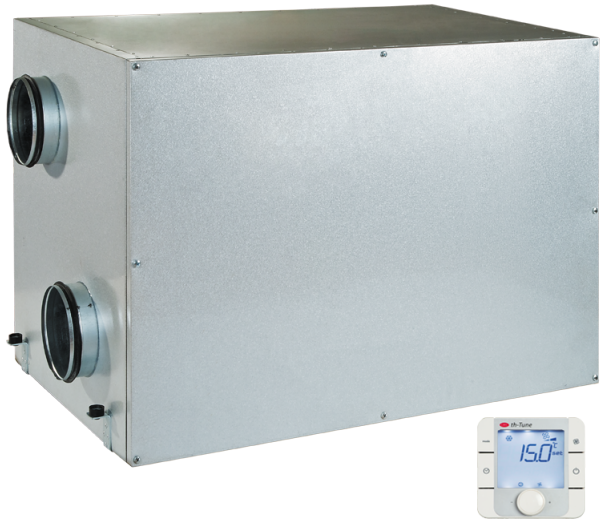

KOMFORT Roto EC LE 2000-12 S17

Air handling units with rotary heat exchanger

- Power of electrical reheater: 12000
- Sound pressure level LpA at 3 m: 64
- Heat exchanger type: Rotary
- Heat exchanger material: Aluminum
- Supply filter: G4
- Extract filter: G4
- Sound-insulated casing
- Reheater: Electric
- Control: Wired control panel
- Casing material: Galvanized steel
- Humidity sensor: Optional
- CO2 sensor: Optional
- PM2.5 sensor: Optional

	Unit of measurement	KOMFORT Roto EC LE 2000-12 S17
Connected air duct size	mm	500x300
Phases	-	3
Minimum supply voltage	V	400
Maximum supply voltage	V	400
Power supply frequency	Hz	50/60
Rated power	W	1070
Power of electrical reheater	W	12000
Unit current	A	22.4
Maximum airflow	m³/h	2250
Sound pressure level LpA at 3 m	dB(A)	64
Heat recovery efficiency, max	%	93
Heat exchanger type	-	Rotary
Heat exchanger material	-	Aluminum
Weight	kg	198
Supply filter	-	G4
Extract filter	-	G4
Transported air temperature (max)	°C	40
Transported air temperature (min)	°C	-25
Ambient air temperature max	°C	40
Ambient air temperature min	°C	1

Ingress protection rating	-	IP22
Ambient air humidity max	%	80
Ingress protection rating of the drive	-	IP44

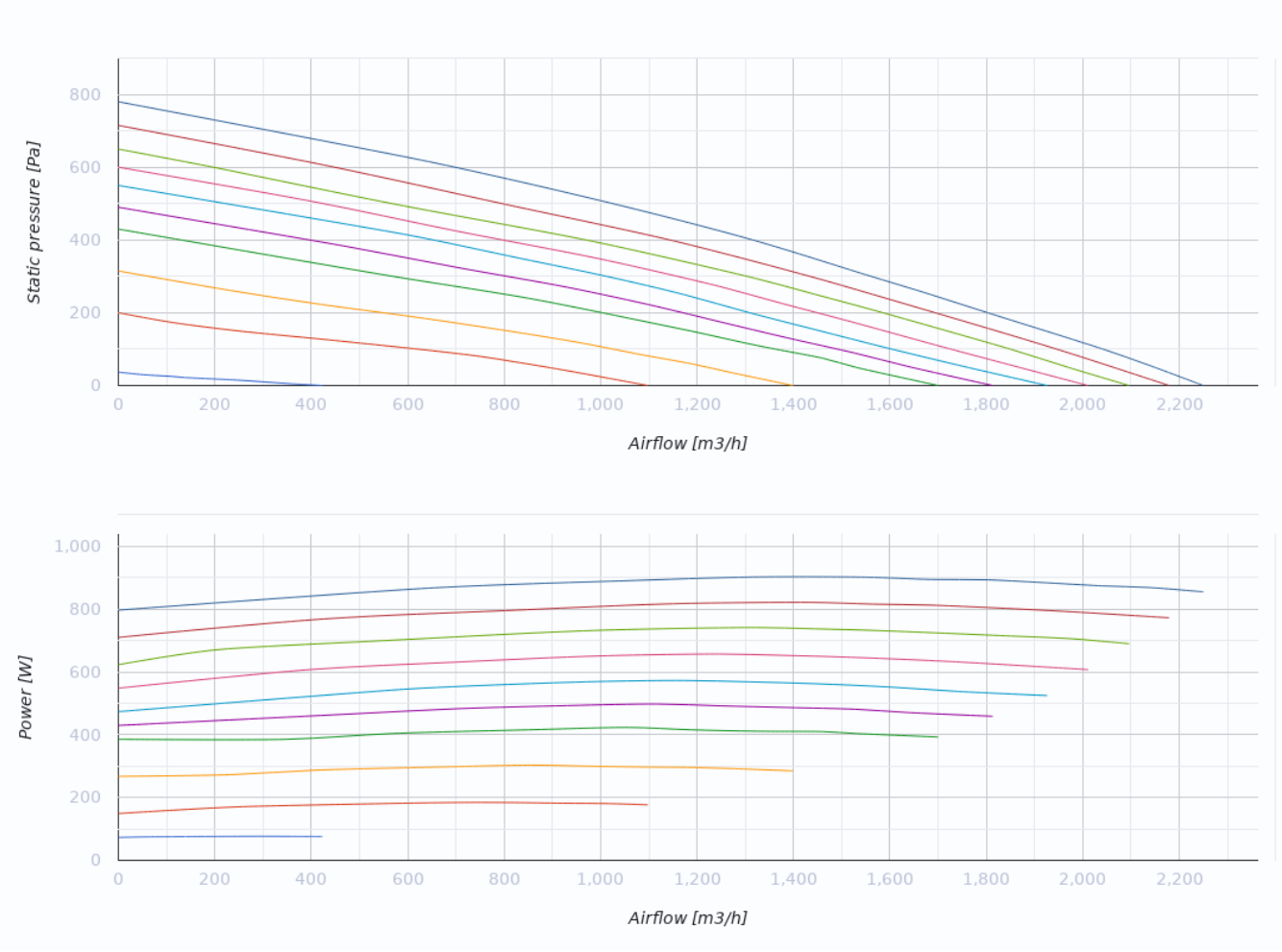

Dimensions

B	B1	H	L	X	Y
875	630	1010	1485	500	300

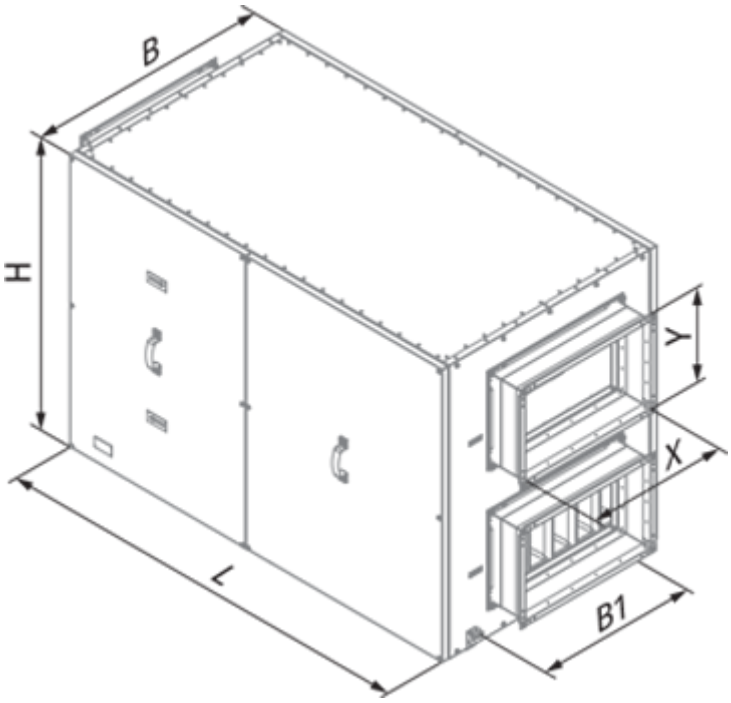

Accessories

For rectangular ducts

Name	Photo	Description
VRVS 50x30		Backdraft air dampers for rectangular ducts
VK 50x30		Air dampers for rectangular ducts

Humidity sensors

Name	Photo	Description
FS2		Humidity sensor

Other accessories

Name	Photo	Description
FP 800x477x47 G4		G4 panel filter