

# Jet 100 H

Extract fans

- Sound pressure level LpA at 3 m: 34
- Casing material: Plastic
- Humidity sensor
- Timer: Turn off timer

| | Unit of measurement | Jet 100 H |
|---|---|---|
| Connected air duct size | mm | 100 |
| Maximum supply voltage | V | 240 |
| Minimum supply voltage | V | 220 |
| Power supply frequency | Hz | 50 |
| Rated power | W | 14 |
| Unit current | A | 0.085 |
| Maximum airflow | m³/h | 95 |
| Sound pressure level LpA at 3 m | dB(A) | 34 |
| Ambient air temperature min | °C | 1 |
| Ambient air temperature max | °C | 40 |
| Ingress protection rating | - | IP24 |
| Impeller material | - | Plastic |

## Dimensions

| a | b | c | Ø d | e |
|---|---|---|---|---|
| 150 | 122 | 125 | 98 | 36 |

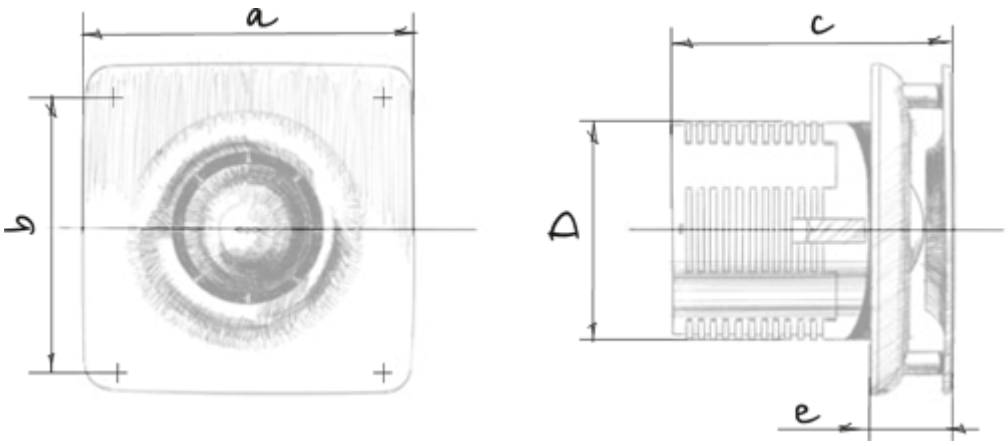
a
b
c
D
e

## Ecodesign

| | | | | | | |
|---|---|---|---|---|---|---|
| Trademark | Blauberg | | | | | |
| Model | Jet 100 H | | | | | |
| Specific energy consumption (SEC) (kWh/(m²/a)) | Cold | | Average | | Warm | |
| | -53.4 | A+ | -26.4 | B | -10.9 | E |
| Type of ventilation unit | Unidirectional | | | | | |
| Type of drive installed | Multi-speed | | | | | |
| Type of heat recovery system | None | | | | | |
| Maximum flow rate (m³/h) | 95 | | | | | |
| Electric power input (W) | 14 | | | | | |
| Reference flow rate (m³/s) | 0.018 | | | | | |
| Specific power input (SPI) (W/(m³/h)) | 0.095 | | | | | |
| Control typology | Local demand control | | | | | |
| Maximum external leakage rates (%) | 2.7 | | | | | |
| Declared typology | RVU UVU | | | | | |
| Sound power level (dB(A)) | 54 | | | | | |
| The annual electricity consumption (AEC) (kWh/a) | Cold | | Average | | Warm | |
| | 77 | | 77 | | 77 | |
| The annual heating saved (AHS) (kWh/a) | Cold | | Average | | Warm | |
| | 5536 | | 2830 | | 1280 | |

## Accessories

### Thyristor speed controllers

| Name | Photo | Description |
|---|---|---|
| CDT E1.8 |  | Thyristor speed controller |