

Iso-Primo EC 400 T

Mixed-flow inline fans in sound-insulated casings with EC-motors

- Sound pressure level LpA at 3 m: 49
- Sound-insulated casing
- Impeller type: Mixed-flow
- Casing material: Galvanized steel
- Installation in any position
- Timer: Turn off timer

	Unit of measurement	Iso-Primo EC 400 T
Connected air duct size	mm	400
Phases	-	1
Maximum supply voltage	V	230
Minimum supply voltage	V	230
Power supply frequency	Hz	50/60
Rated power	W	726
Unit current	A	4.8
Maximum airflow	m^3/h	5415
Sound pressure level LpA at 3 m	dB(A)	49
Weight	kg	22.8
Transported air temperature (max)	°C	55
Transported air temperature (min)	°C	-25
Ambient air temperature max	°C	40
Ambient air temperature min	°C	1
Ingress protection rating	-	IPX4
Ingress protection rating of the drive	-	IP44
Impeller material	-	Plastic

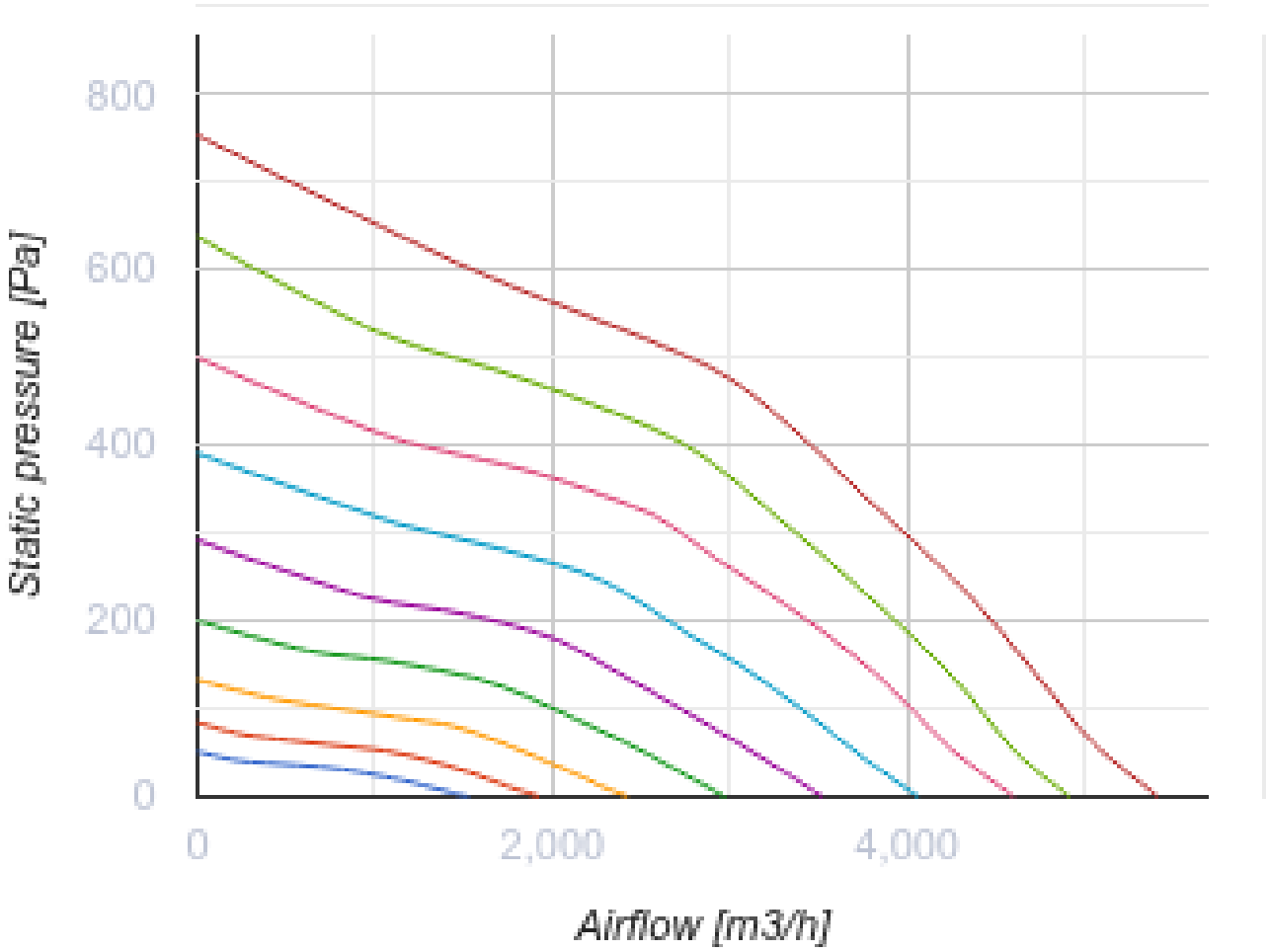
800
600
400
200
0
Static pressure [Pa]
0
2,000
4,000
Airflow [m3/h]

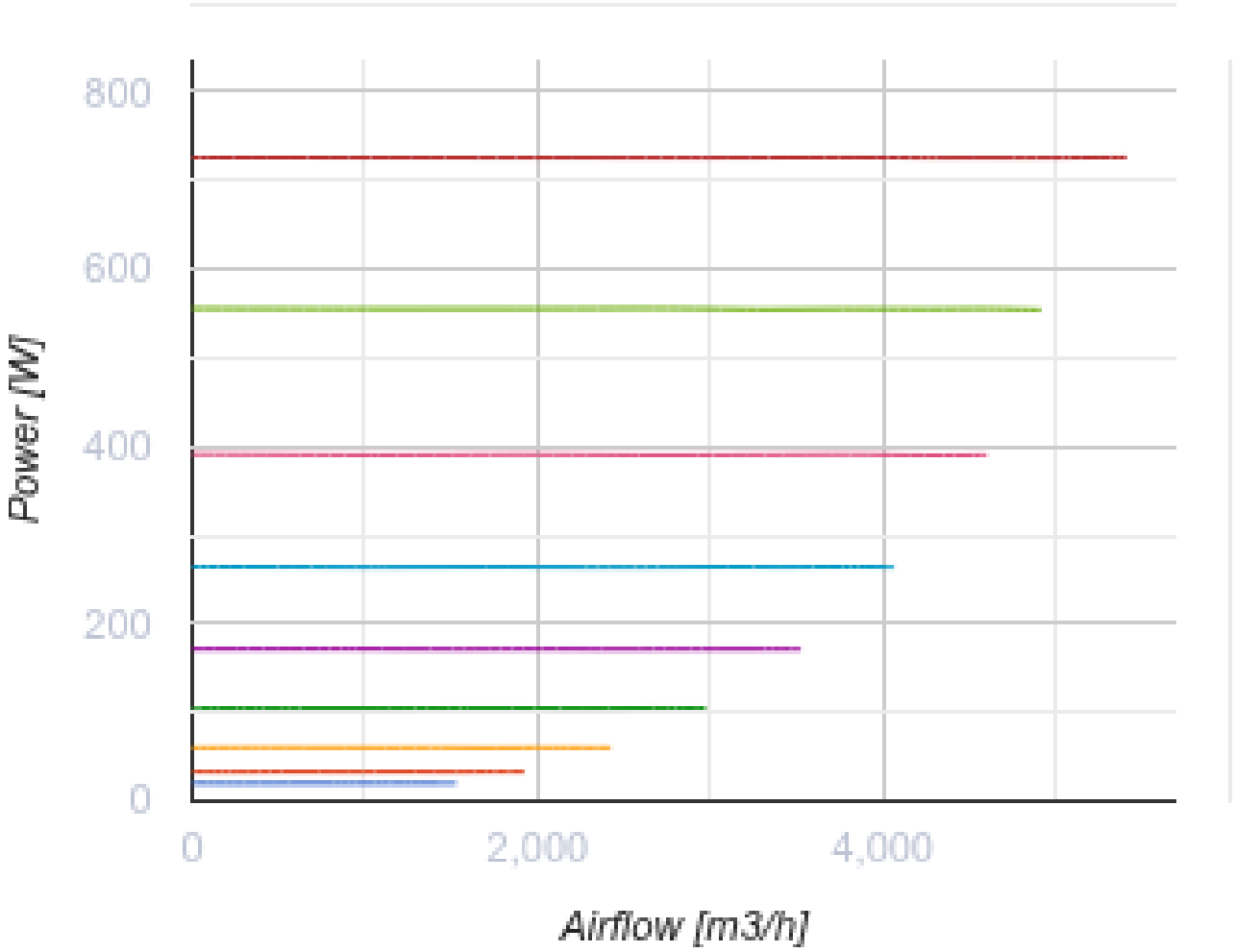

Dimensions

Ø D	Ø D1	H	L	L1
399	460	517	648	785

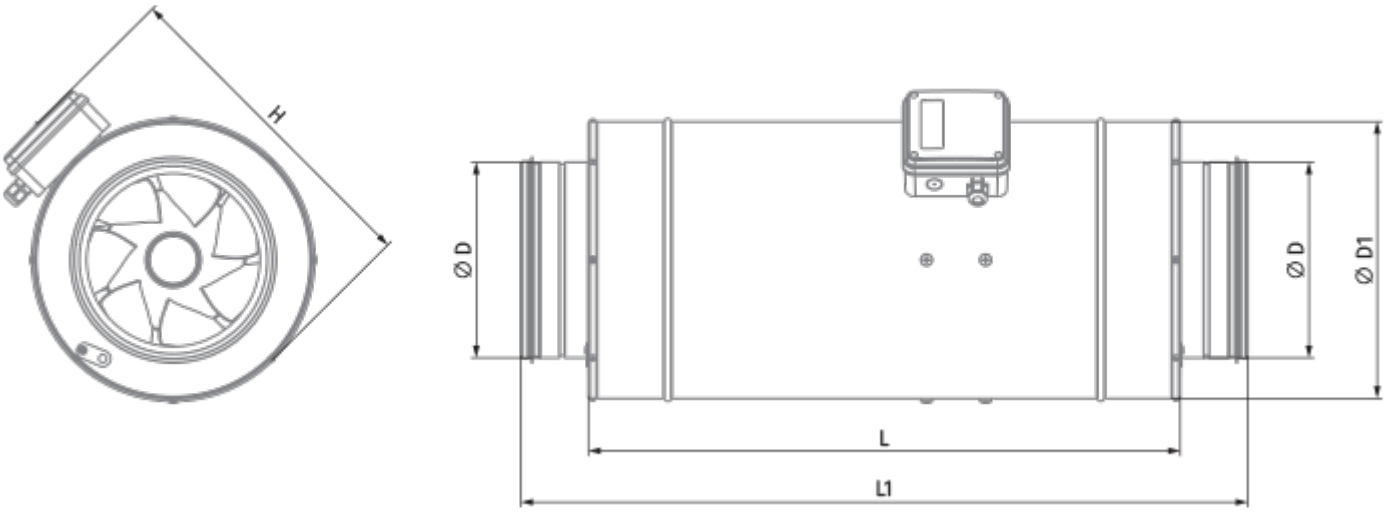

Accessories

For round ducts

Name	Photo	Description
SD 400/900		Silencers for round ducts
SD 400/1200		Silencers for round ducts

For round ducts

Name	Photo	Description
VKA 400		Air dampers for round ducts

EC motors regulators

Name	Photo	Description
CDT E/0-10		Speed control for EC motors