

# Iso-Primo EC 315 T

Mixed-flow inline fans in sound-insulated casings with EC-motors

- Sound pressure level LpA at 3 m: 47
- Sound-insulated casing
- Impeller type: Mixed-flow
- Casing material: Galvanized steel
- Installation in any position
- Timer: Turn off timer

| | Unit of measurement | Iso-Primo EC 315 T |
|---|---|---|
| Connected air duct size | mm | 315 |
| Phases | - | 1 |
| Minimum supply voltage | V | 230 |
| Maximum supply voltage | V | 230 |
| Power supply frequency | Hz | 50/60 |
| Rated power | W | 353 |
| Unit current | A | 1.56 |
| Maximum airflow | $m^3/h$ | 3090 |
| Sound pressure level LpA at 3 m | dB(A) | 47 |
| Weight | kg | 20.7 |
| Transported air temperature (max) | °C | 55 |
| Transported air temperature (min) | °C | -25 |
| Ambient air temperature min | °C | 1 |
| Ambient air temperature max | °C | 40 |
| Ingress protection rating | - | IPX4 |
| Ingress protection rating of the drive | - | IP44 |
| Impeller material | - | Plastic |

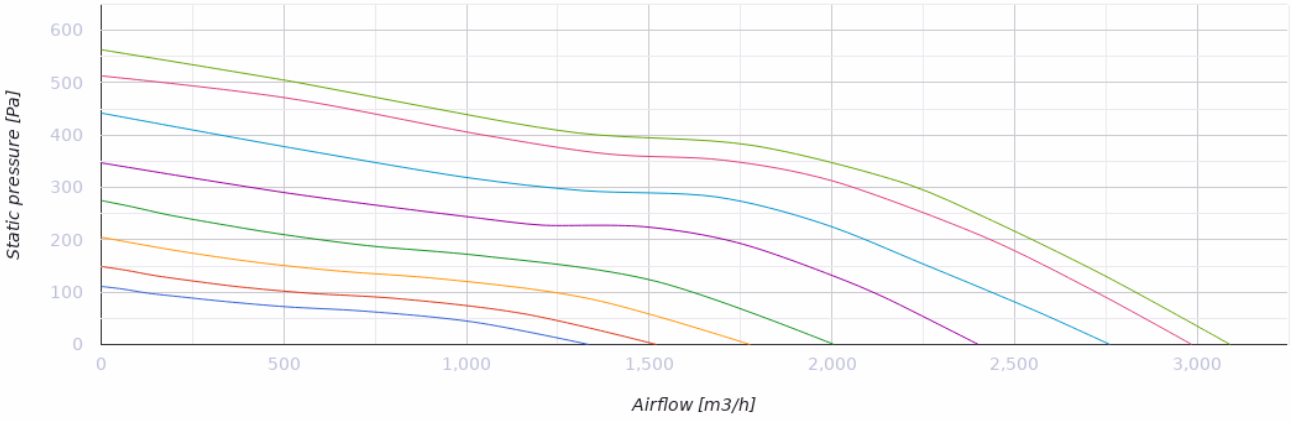
Static pressure [Pa]
600
500
400
300
200
100
0
0
500
1,000
1,500
2,000
2,500
3,000
Airflow [m3/h]

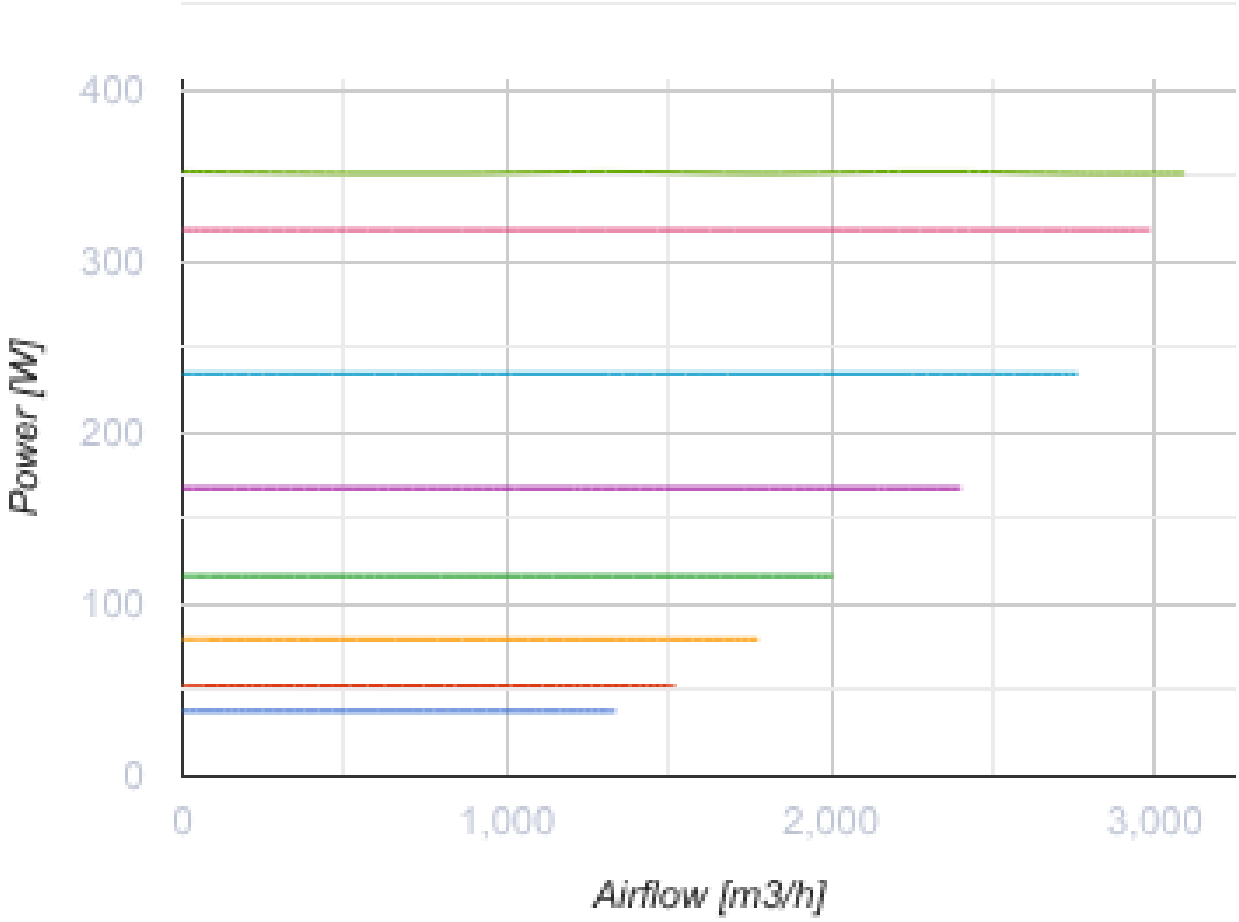
Power [W]
400
300
200
100
0
0
1,000
2,000
3,000
Airflow [m3/h]

## Dimensions

| Ø D | Ø D1 | H | L | L1 |
|---|---|---|---|---|
| 314 | 412 | 468 | 601 | 739 |

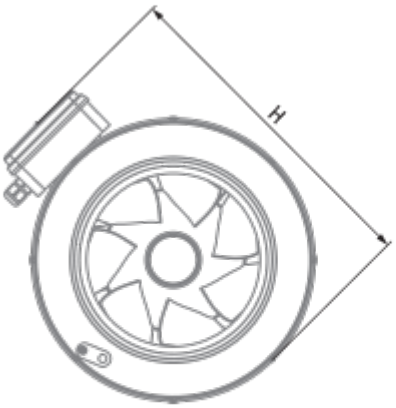


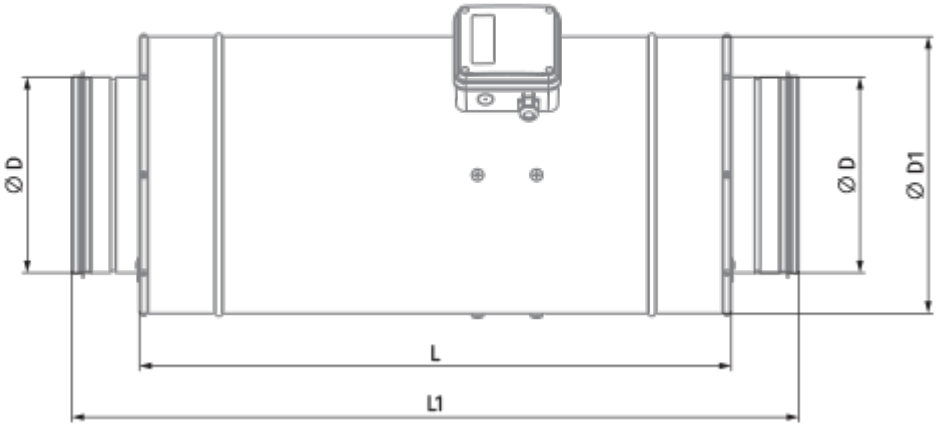


## Accessories

### For round ducts

| Name | Photo | Description |
|---|---|---|
| SD 315/600 |  | Silencers for round ducts |
| SD 315/900 |  | Silencers for round ducts |
| SD 315/1200 |  | Silencers for round ducts |

### For round ducts

| Name | Photo | Description |
|---|---|---|
| KFBK 315 |  | Filter boxes for round ducts |
| KFBT 315 G4 |  | Filter boxes with pocket filters for round ducts |
| KFBT 315 F5 |  | Filter boxes with pocket filters for round ducts |

| | | |
|---|---|---|
| KFBT 315 F7 |  | Filter boxes with pocket filters for round ducts |

### For round ducts

| Name | Photo | Description |
|---|---|---|
| VRV 315 |  | Backdraft dampers with spring for round ducts |
| VKA 315 |  | Air dampers for round ducts |

### Water heaters

| Name | Photo | Description |
|---|---|---|
| WKH 315-2 |  | Duct water heaters for round ducts |
| WKH 315-4 |  | Duct water heaters for round ducts |

### Electrical heaters

| Name | Photo | Description |
|---|---|---|
| EKH 315-1.2 |  | Duct electrical heaters for round ducts |
| EKH 315-2.0 |  | Duct electrical heaters for round ducts |
| EKH 315-2.4 |  | Duct electrical heaters for round ducts |
| EKH 315-3.6 |  | Duct electrical heaters for round ducts |
| EKH 315-6.0 |  | Duct electrical heaters for round ducts |
| EKH 315-9.0 |  | Duct electrical heaters for round ducts |

## EC motors regulators

| Name | Photo | Description |
|---|---|---|
| CDT E/0-10 |  | Speed control for EC motors |