

Iso-Primo EC 250 T

Mixed-flow inline fans in sound-insulated casings with EC-motors

- Sound pressure level LpA at 3 m: 48
- Sound-insulated casing
- Impeller type: Mixed-flow
- Casing material: Galvanized steel
- Installation in any position
- Timer: Turn off timer

	Unit of measurement	Iso-Primo EC 250 T
Connected air duct size	mm	250
Phases	-	1
Minimum supply voltage	V	230
Maximum supply voltage	V	230
Power supply frequency	Hz	50/60
Rated power	W	168
Unit current	A	1.34
Maximum airflow	m^3/h	1750
Sound pressure level LpA at 3 m	dB(A)	48
Weight	kg	9.8
Transported air temperature (max)	°C	55
Transported air temperature (min)	°C	-25
Ambient air temperature min	°C	1
Ambient air temperature max	°C	40
Ingress protection rating	-	IPX4
Ingress protection rating of the drive	-	IP44
Impeller material	-	Plastic

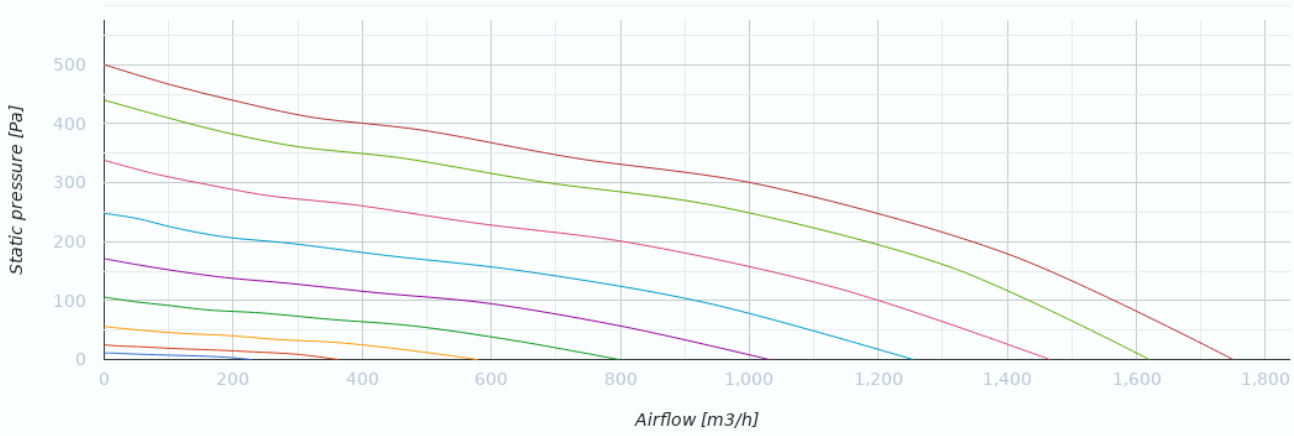

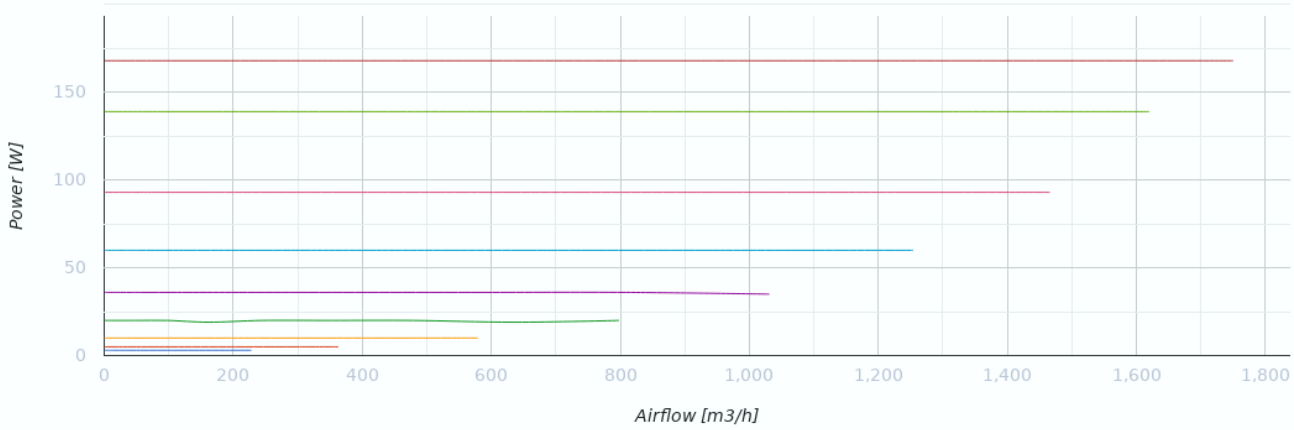

Dimensions

Ø D	Ø D1	H	L	L1
249	337	389	601	739

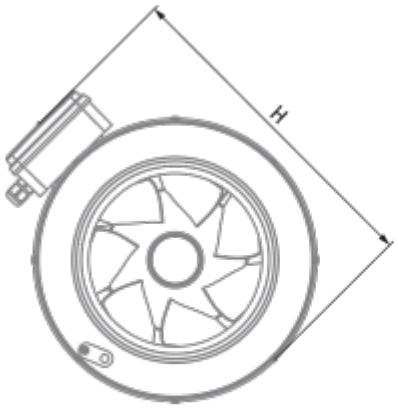

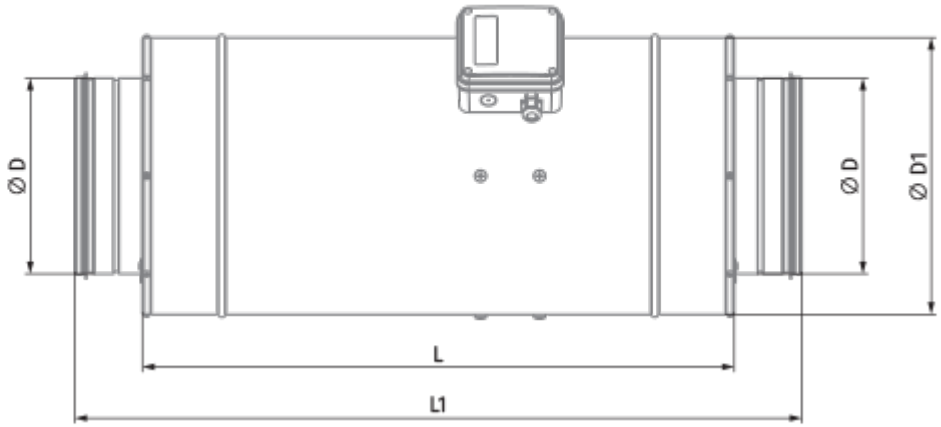

Accessories

For round ducts

Name	Photo	Description
SD 250/600		Silencers for round ducts
SD 250/900		Silencers for round ducts
SD 250/1200		Silencers for round ducts

For round ducts

Name	Photo	Description
KFBK 250		Filter boxes for round ducts
KFBT 250 G4		Filter boxes with pocket filters for round ducts
KFBT 250 F5		Filter boxes with pocket filters for round ducts
KFBT 250 F7		Filter boxes with pocket filters for round ducts

For round ducts

Name	Photo	Description
VRV 250		Backdraft dampers with spring for round ducts
VKA 250		Air dampers for round ducts

Water heaters

Name	Photo	Description

WKH 250-2		Duct water heaters for round ducts
WKH 250-4		Duct water heaters for round ducts

Electrical heaters

Name	Photo	Description
EKH 250-1.2		Duct electrical heaters for round ducts
EKH 250-2.0		Duct electrical heaters for round ducts
EKH 250-2.4		Duct electrical heaters for round ducts
EKH 250-3.0		Duct electrical heaters for round ducts
EKH 250-3.6		Duct electrical heaters for round ducts
EKH 250-6.0	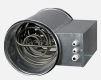	Duct electrical heaters for round ducts
EKH 250-9.0		Duct electrical heaters for round ducts

EC motors regulators

Name	Photo	Description
CDT E/0-10		Speed control for EC motors