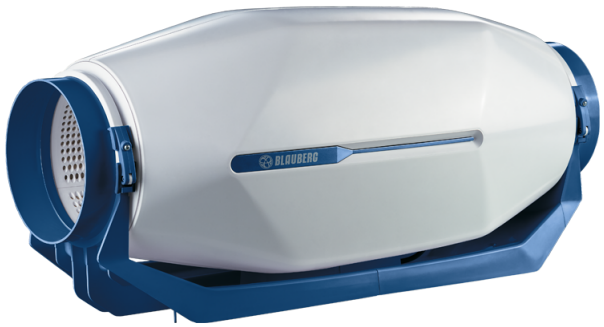

inWave EC 100/125

Mixed-flow inline fans in sound-insulated casings with EC-motors

- Sound pressure level LpA at 3 m: 29
- Sound-insulated casing
- Impeller type: Mixed-flow
- Casing material: Polypropylene

	Unit of measurement	inWave EC 100/125	
Connected air duct size	mm	100/125	
Phases	-	1	
Minimum supply voltage	V	230	
Maximum supply voltage	V	230	
Power supply frequency	Hz	50	
Rated power	W	17	
Unit current	A	0.16	
Maximum airflow	m³/h	245	350
Sound pressure level LpA at 3 m	dB(A)	29	28
Weight	kg	3.6	
Transported air temperature (max)	°C	55	
Transported air temperature (min)	°C	-25	
Ambient air temperature min	°C	1	
Ambient air temperature max	°C	40	
Ingress protection rating	-	IPX4	
Ingress protection rating of the drive	-	IP44	
Impeller material	-	Plastic	

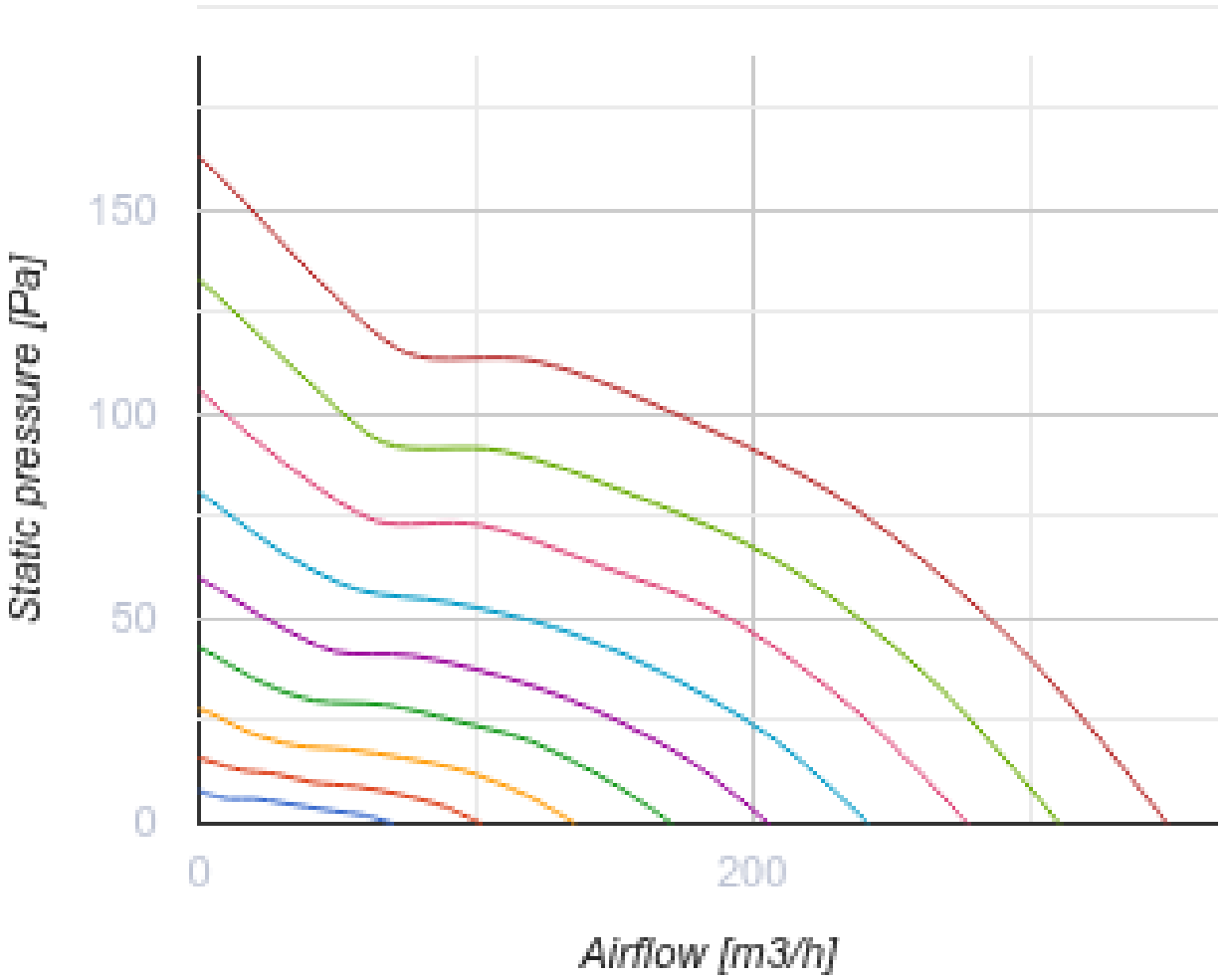
Static pressure [Pa]
150
100
50
0
0
200
Airflow [m3/h]

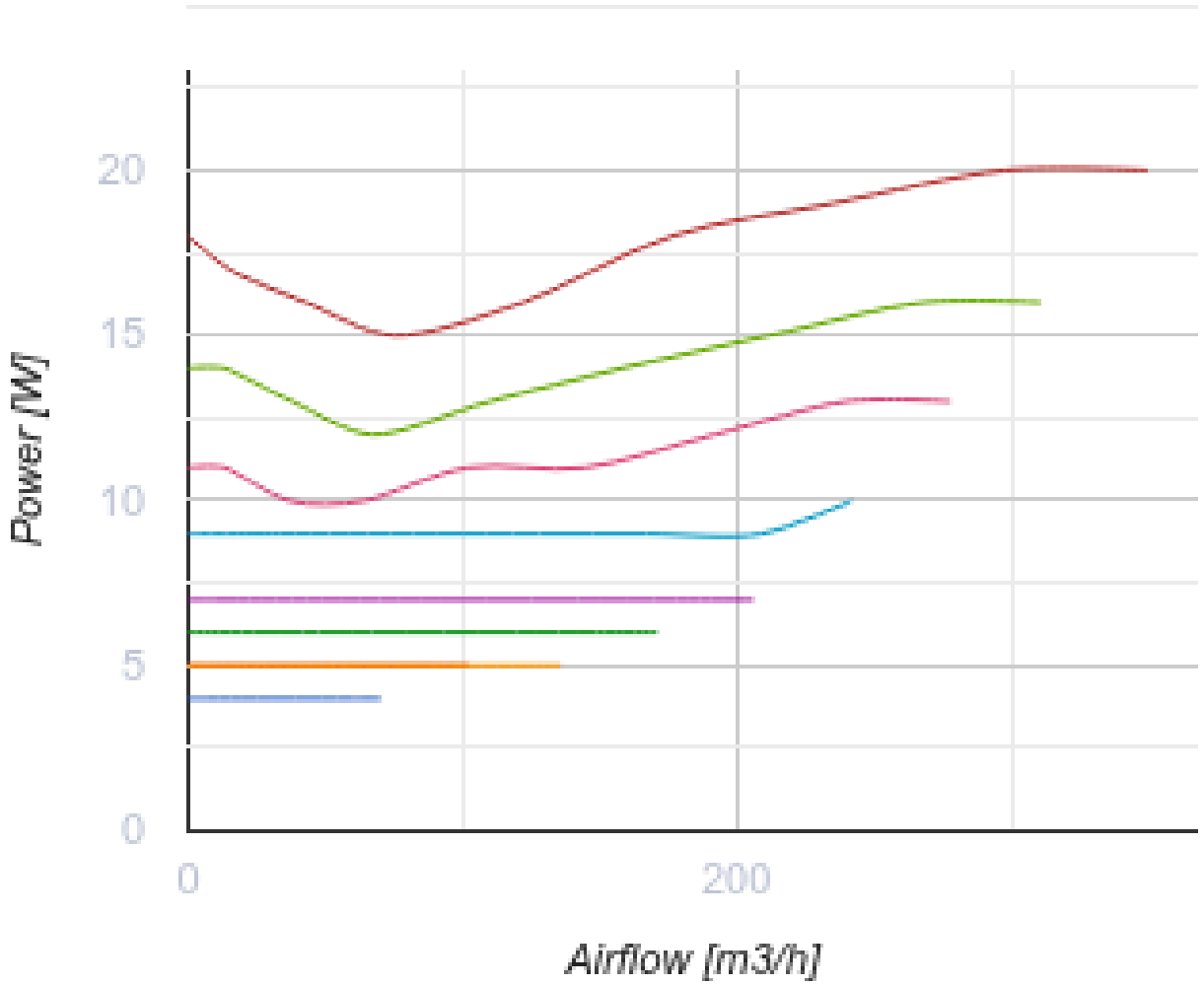

Dimensions

Ø D	W	L	H
125	207	502	224

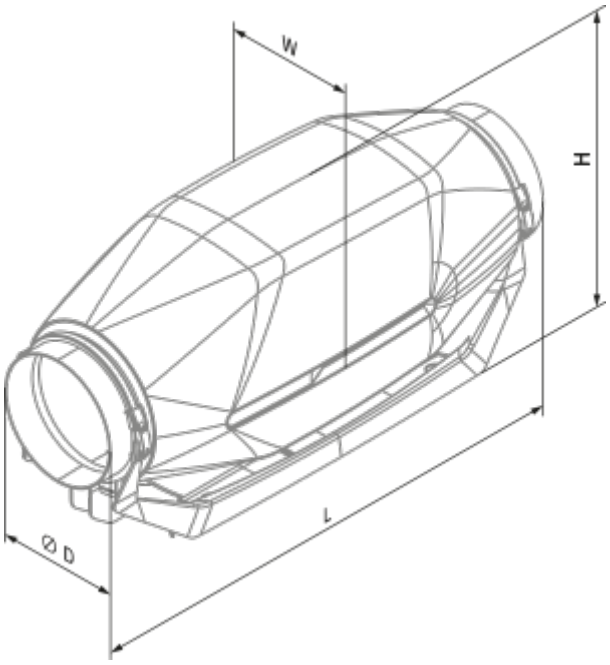
W
H
L
Ø D

Ecodesign

Trademark	Blauberg					
Model	inWave EC 100/125					
Specific energy consumption (SEC) (kWh/(m²/a))	Cold		Average		Warm	
	-54.4	A+	-27.4	B	-11.9	E
Type of ventilation unit	Unidirectional					
Type of drive installed	Variable speed					
Type of heat recovery system	None					
Maximum flow rate (m³/h)	176					
Electric power input (W)	18					
Reference flow rate (m³/s)	0.036					
Reference pressure difference (Pa)	50					
Specific power input (SPI) (W/(m³/h))	0.07					
Control typology	Local demand control					
Maximum external leakage rates (%)	2.7					
Sound power level (dB(A))	38					
The annual electricity consumption (AEC) (kWh/a)	Cold		Average		Warm	
	37		37		37	
The annual heating saved (AHS) (kWh/a)	Cold		Average		Warm	
	5536		2830		1280	

Accessories

For round ducts

Name	Photo	Description
SD 125/600		Silencers for round ducts
SD 125/900		Silencers for round ducts
SD 125/1200		Silencers for round ducts

For round ducts

Name	Photo	Description
KFBK 125		Filter boxes for round ducts
KFBT 125 G4	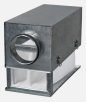	Filter boxes with pocket filters for round ducts
KFBT 125 F5		Filter boxes with pocket filters for round ducts
KFBT 125 F7		Filter boxes with pocket filters for round ducts

For round ducts

Name	Photo	Description
VRV 125		Backdraft dampers with spring for round ducts
VKA 125		Air dampers for round ducts

Water heaters

Name	Photo	Description
WKH 125-2		Duct water heaters for round ducts
WKH 125-4		Duct water heaters for round ducts

Electrical heaters

Name	Photo	Description
EKH 125-0.6		Duct electrical heaters for round ducts
EKH 125-0.8		Duct electrical heaters for round ducts
EKH 125-1.2		Duct electrical heaters for round ducts

EKH 125-1.6		Duct electrical heaters for round ducts
EKH 125-2.4		Duct electrical heaters for round ducts

EC motors regulators

Name	Photo	Description
CDT E/0-10		Speed control for EC motors