

FQM 160

Spigot with a plate for round ducts

- Casing material: Coated steel

	Unit of measurement	FQM 160
Connected air duct size	mm	160

Dimensions

Ø D	a	b	L
160	210 × 210	194 × 194	50

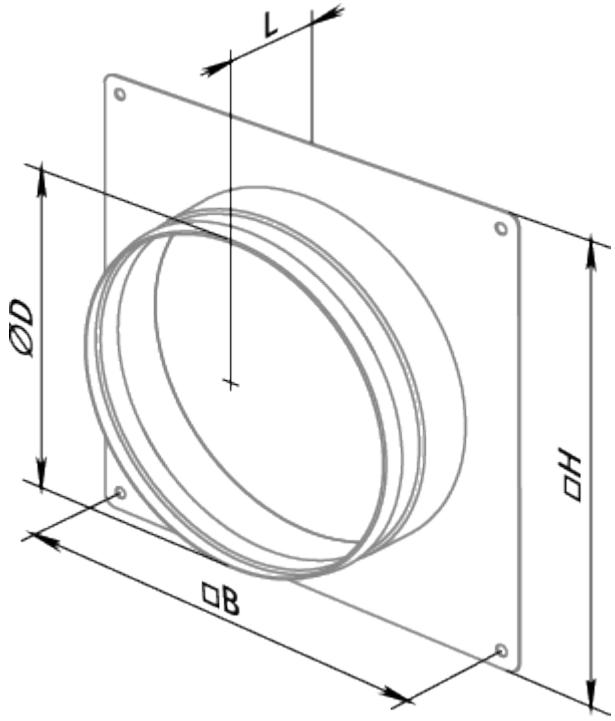
L
ØD
□H
□B