

ENH 150-1.2-1 S21

Duct heater for supply air reheating

- Casing material: Galvanized steel

	Unit of measurement	ENH 150-1.2-1 S21
Connected air duct size	mm	150
Phases	-	1
Minimum supply voltage	V	230
Maximum supply voltage	V	230
Power supply frequency	Hz	50/60
Rated power	W	1200

Dimensions

ØD	B	H	L	L1
149	170	282	306	190

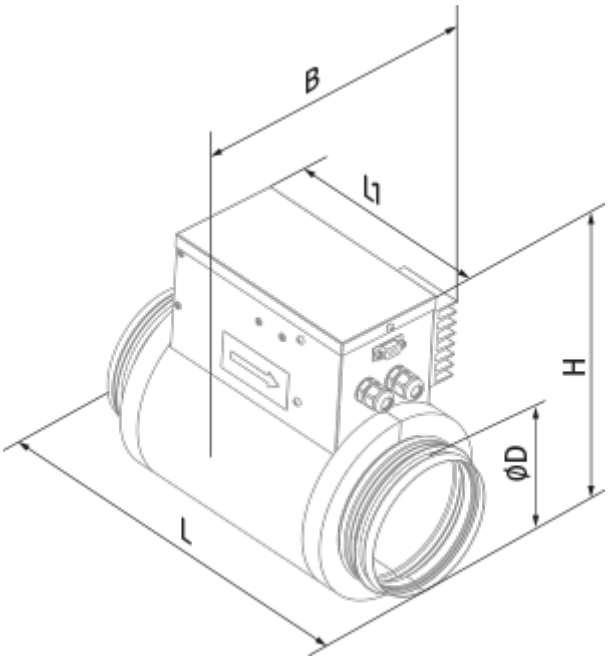
B
l1
H
ØD
L