

DWP2 315

Swirl diffusers

- Casing material: Steel

	Unit of measurement	DWP2 315
Weight	kg	0.767

Dimensions

d	H
315	150

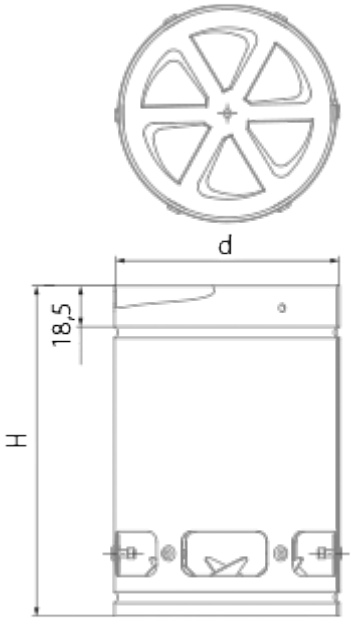
d
18,5
H