

DWP2 150

Swirl diffusers

- Casing material: Steel

	Unit of measurement	DWP2 150
Weight	kg	0.323

Dimensions

d	H
150	150

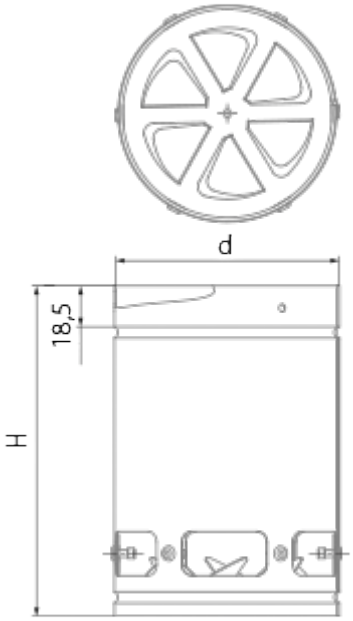
d
18,5
H