DAH 251-13

Kitchen exhaust hood

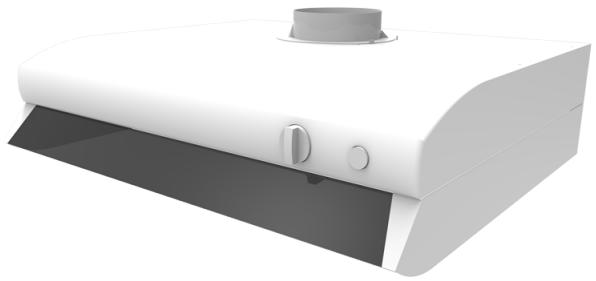

	Unit of measurement	DAH 251-13
Phases	-	1
Minimum supply voltage	V	230
Maximum supply voltage	V	230
Power supply frequency	Hz	50/60
Rated power	W	11

Dimensions

Ø	L	L1
125	600	510

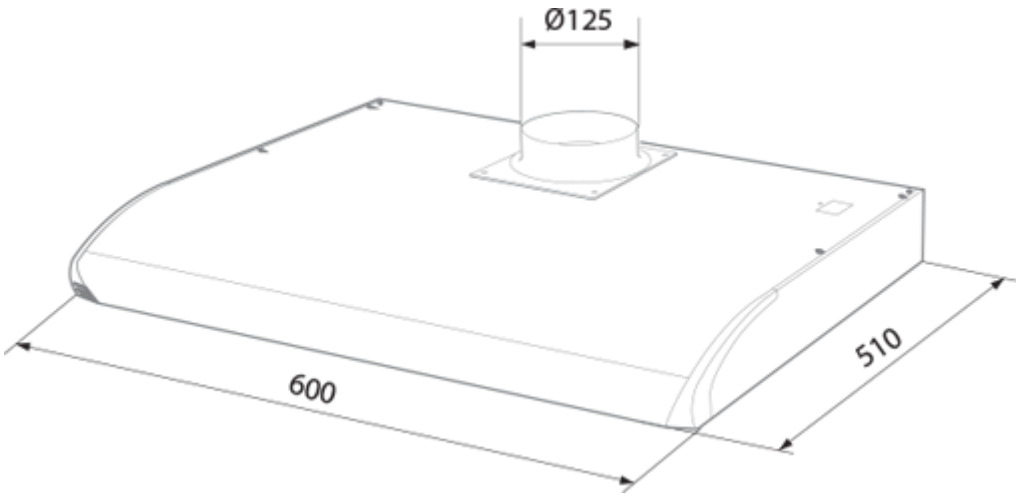
Ø125
600
510