

Centro EC 250 GI1

Centrifugal inline fans in plastic casings with EC-motors

- Sound pressure level LpA at 3 m: 48
- Control: Built-in speed controller
- Impeller type: Centrifugal impeller with backward curved blades
- Casing material: Plastic
- Installation in any position
- Cable with mains plug
- Temperature sensor: Built-in

	Unit of measurement	Centro EC 250 GI1
Connected air duct size	mm	250
Phases	-	1
Maximum supply voltage	V	230
Minimum supply voltage	V	230
Power supply frequency	Hz	50/60
Rated power	W	165
Unit current	A	1.1
Maximum airflow	m³/h	1250
Sound pressure level LpA at 3 m	dB(A)	48
Weight	kg	4.3
Transported air temperature (max)	°C	60
Transported air temperature (min)	°C	-25
Ingress protection rating	-	IPX4
Ingress protection rating of the drive	-	IP55
Impeller material	-	Plastic

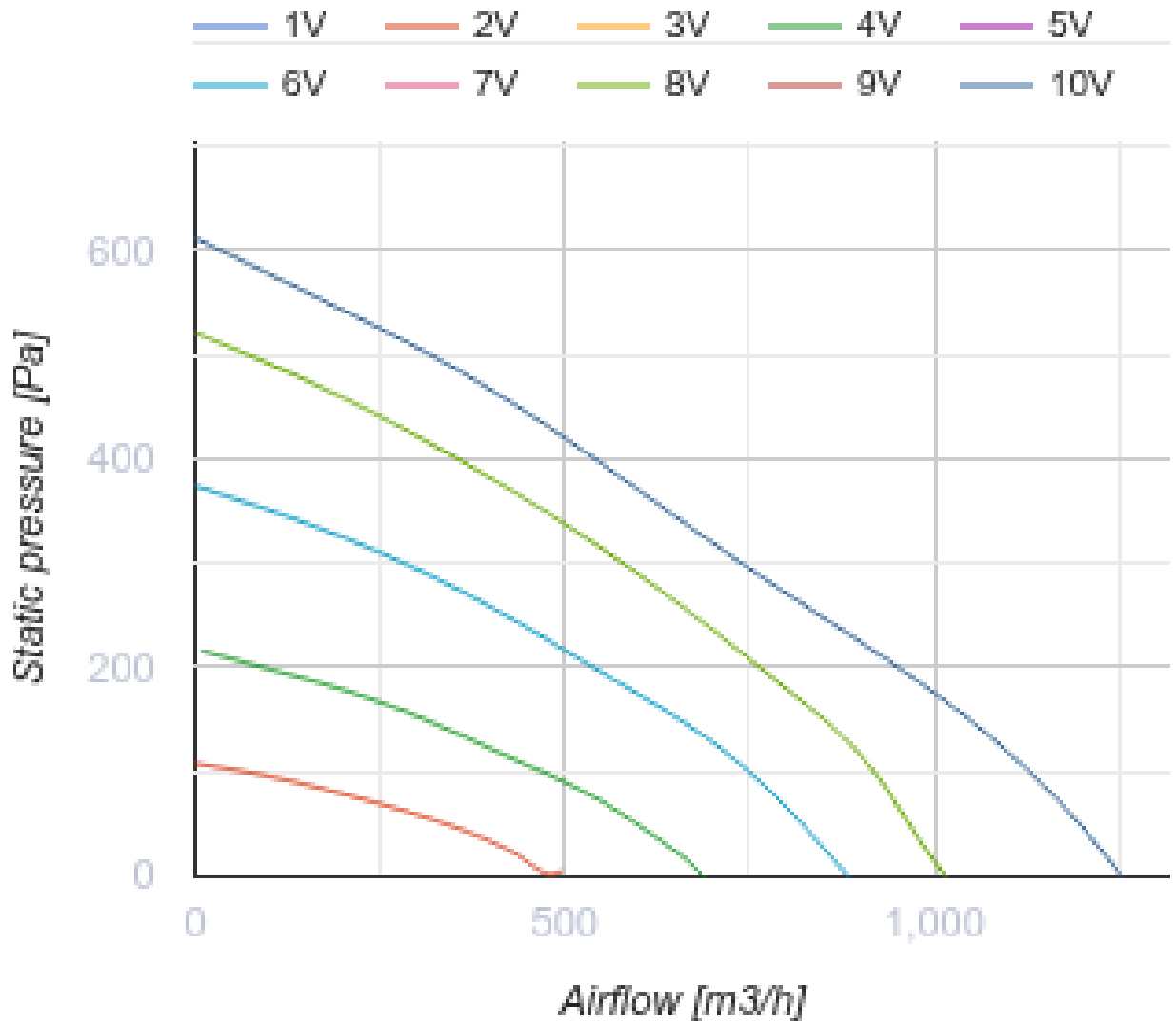
1V
2V
3V
4V
5V
6V
7V
8V
9V
10V
Static pressure [Pa]
600
400
200
0
0
500
1,000
Airflow [m3/h]

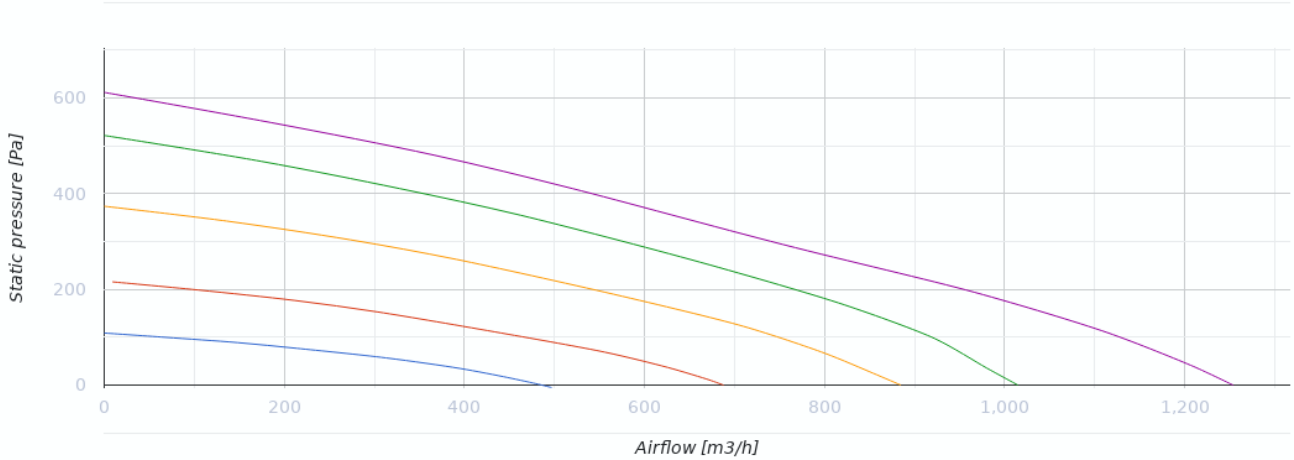
Static pressure [Pa]
600
400
200
0
0
200
400
600
800
1,000
1,200
Airflow [m3/h]

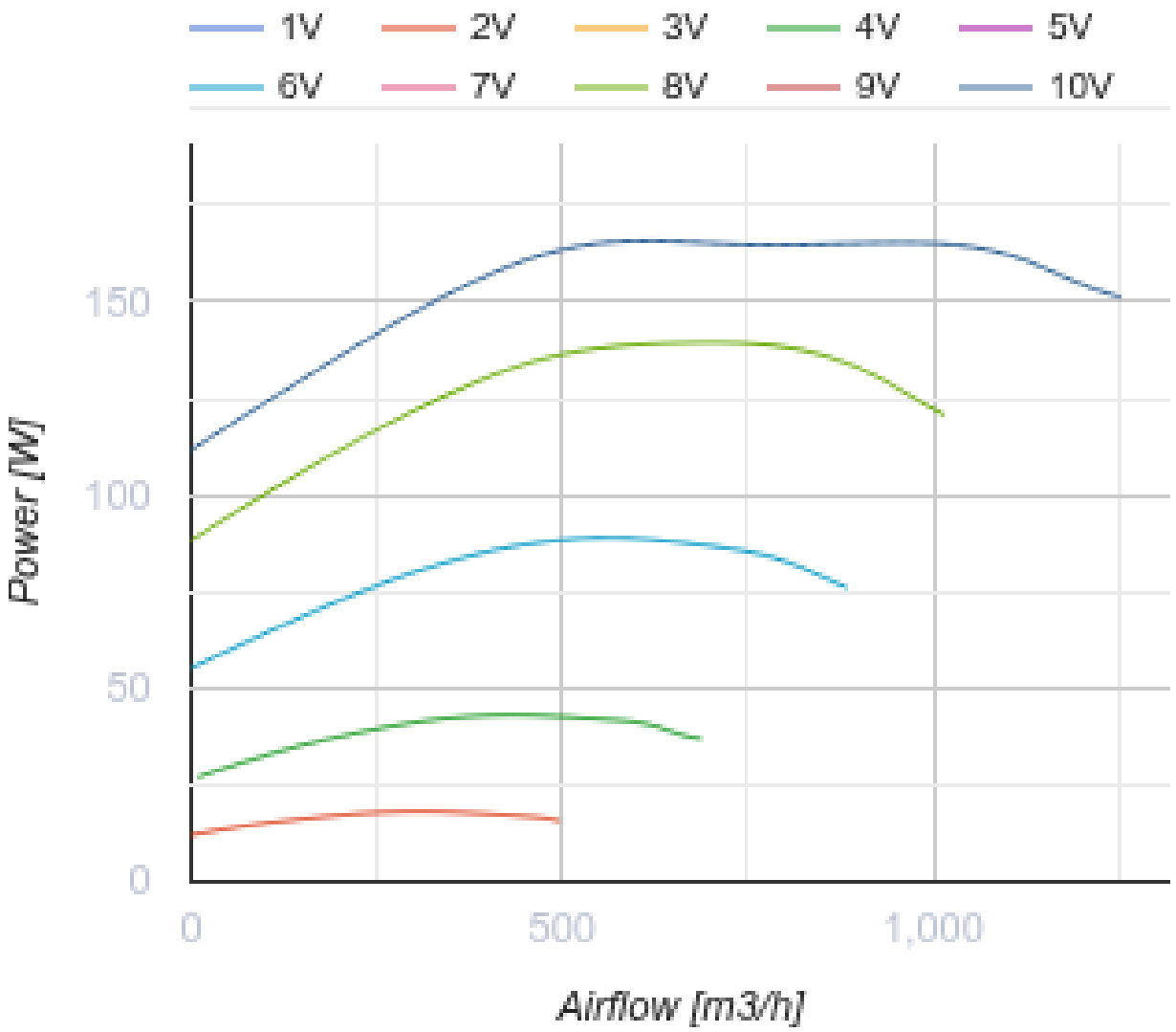

Dimensions

ØD	ØD1	B	L	L1	L2	L3
250	340	354	265	30	30	30

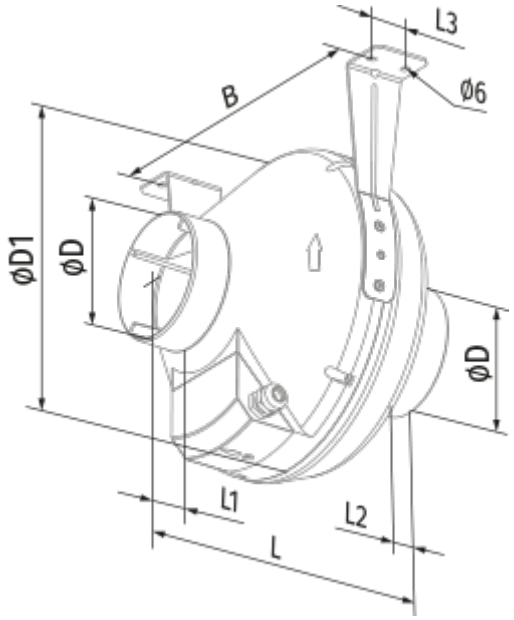
L3
B
Ø6
ØD1
ØD
ØD
L1
L2
L

Ecodesign

Trademark	Blauberg
Model	Centro EC 250 GI1
Type of drive installed	Integrated VSD
Type of heat recovery system	None
Nominal external pressure (Pa)	754
Maximum external leakage rates (%)	2.7
Static efficiency (%)	42.2
Effective electric power input (kW)	0.17
Sound power level (dB(A))	66
Declared typology	NRVU UVU

Accessories

EC motors regulators

Name	Photo	Description
CDT E/0-10		Speed control for EC motors