

Brice 180

Residential exhaust fans with specially designed motors

- Sound pressure level LpA at 3 m: 35
- Backdraft protection: Backdraft damper

	Unit of measurement	Brice 180
Minimum supply voltage	V	220
Maximum supply voltage	V	240
Power supply frequency	Hz	50
Rated power	W	20
Maximum airflow	m^3/h	220
Sound pressure level LpA at 3 m	dB(A)	35

Dimensions

A	B	C	D	E	F	G	H
234	234	15	177	98	20	215	215

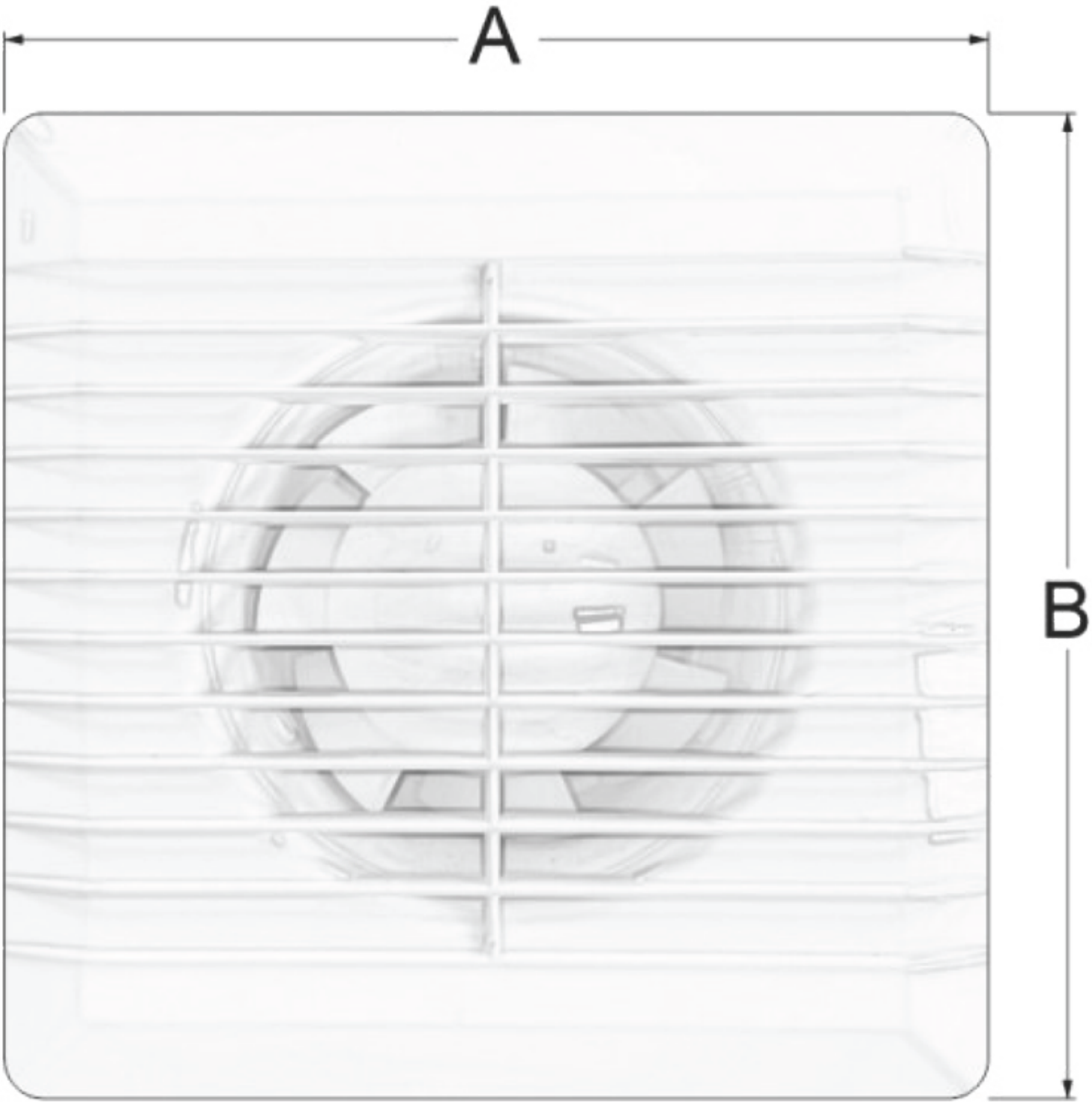
A
B

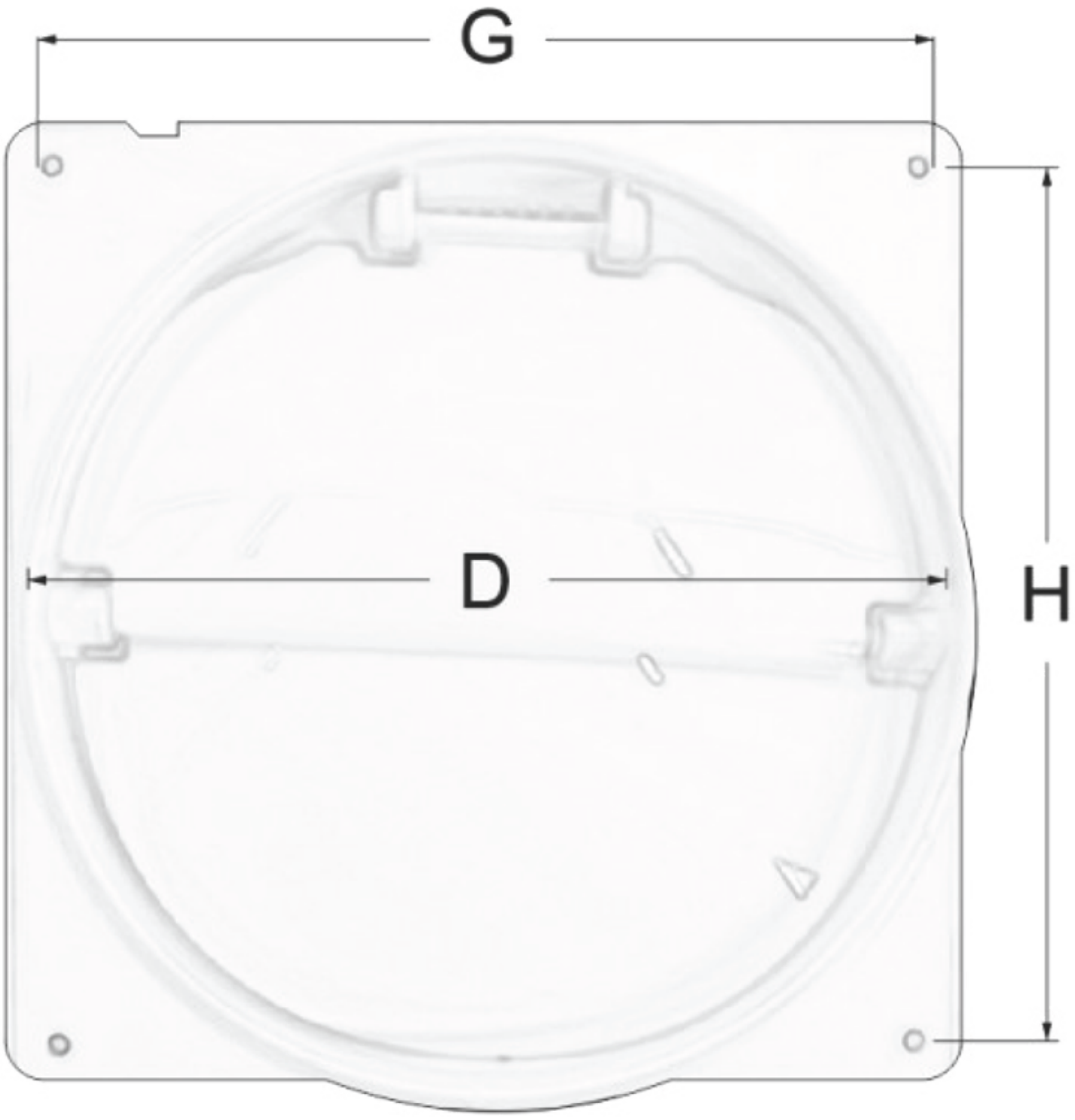
G
D
H

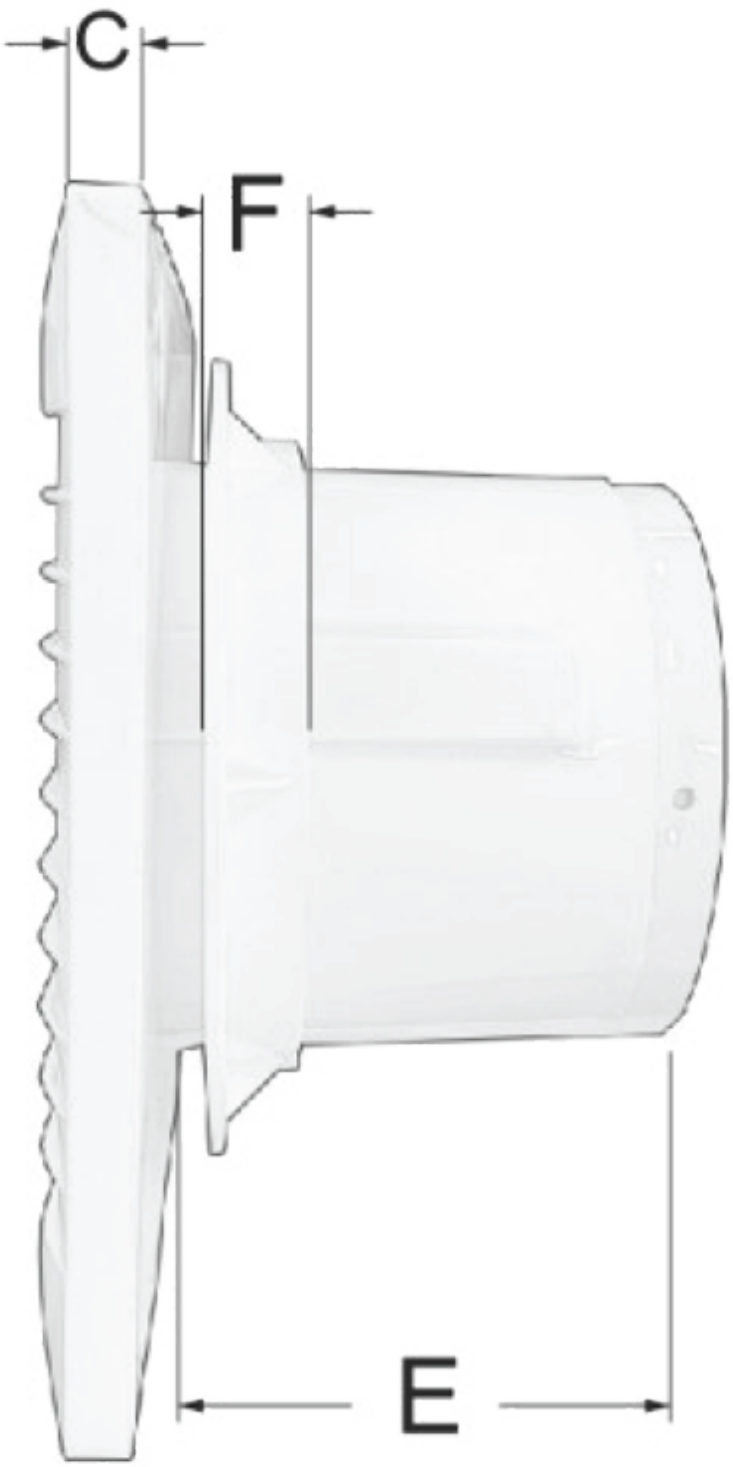
C
F
E