

ALB-25

Units for air cooling and heating

	Unit of measurement	ALB-25
Minimum supply voltage	V	230
Maximum supply voltage	V	230
Power supply frequency	Hz	50
Unit current	A	0.6
Ingress protection rating	-	IP44

Dimensions

B	B1	H	H1	L	L1	K
680	785	605	468	360	286	G 3/4''

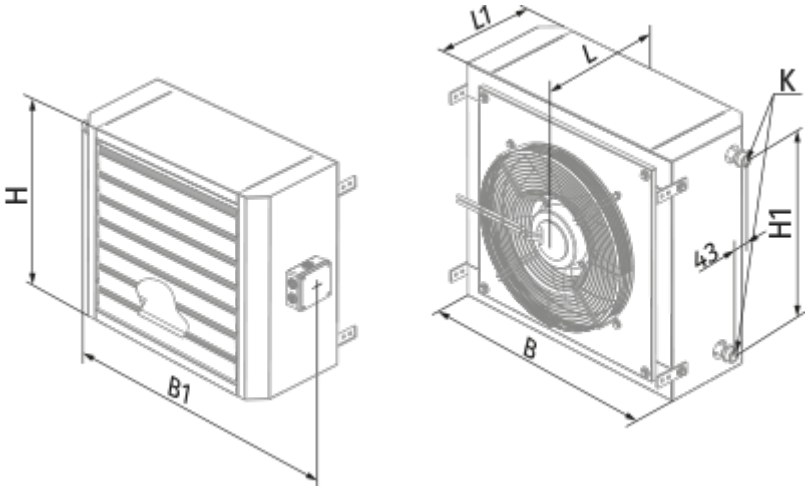

Accessories

Temperature controllers

Name	Photo	Description
MLC E2		Room temperature regulator
MLCD E2		Room temperature regulator