

AH-10 white 100

Plastic hoods decoration of supply and exhaust vents of public, residential and industrial ventilation systems

• Casing material: PVC

	Unit of measurement	AH-10 white 100
Connected air duct size	mm	100

Dimensions

B	H	L	D
220	230.5	54	100

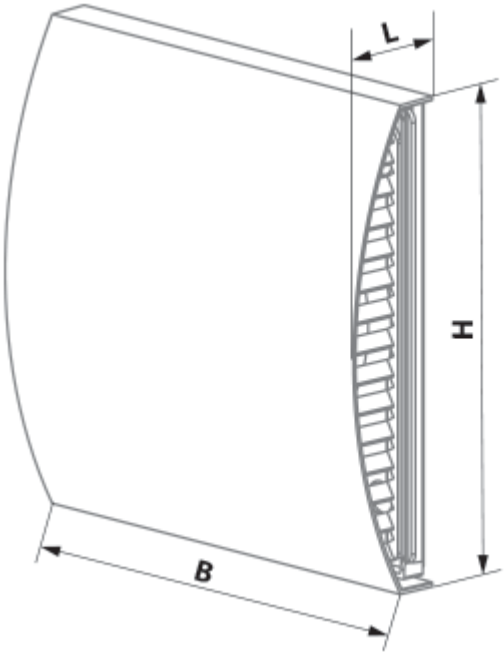
L
H
B

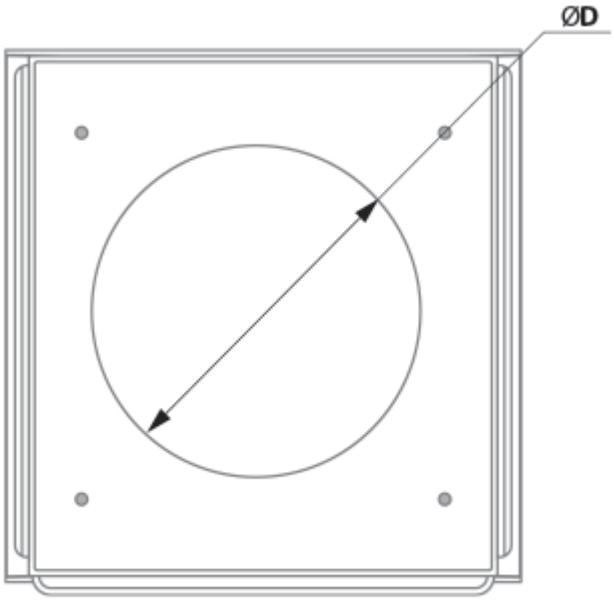
ØD